LS-27-M Modular RF Downconverter/Receiver

User's Manual

Lumistar Inc.

3186 Lionshead Ave.
Suite 100
Carlsbad, California 92010
(760) 431-2181

www.lumistar.net

Lumistar Inc.
3186 Lionshead Ave., Suite 100
Carlsbad, CA 92010
(760) 431-2181
(760) 431-2665 Fax
www.lumistar.net

Table of Contents

List of Figures

List of Tables

Acronyms

AGC - Automatic Gain Control
AM - Amplitude Modulation
BNC - Bayonet Neill–Concelman (connector)
BSC – Best Source Combining
BW – Bandwdith
dB – Decibel
dBm – Decibel milliwatts
DHCP – Dynamic Host Configuration Protocol
DSP - Digital Signal Processor or Digtial Signal Processing
FM - Frequency Modulation
FPGA – Field Programmable Gate Array
GHz - Giga Hertz
GUI – Graphical User Interface
Hz - Hertz
ICD - Interface Control Document
IF - Intermediate Frequency
INV - Invert
IP - Internet Protocol
KB – Kilobyte
kHz - KiloHertz
LED - Light Emitting Diode
Mbps - Mega Bits Per Second
MHz - Mega Hertz
NTSC - National Televison System Committee
OS - Operating System
PAL - Phase Alternating Line
PLL - Phase Lock Loop
RF - Radio Frequency
RX – Receive
SE - Single-Ended
SMA - Subminature Version A
SMB - Subminature Version B
SS-PCMFM - Single Symbol Pulse Code Modulated Frequency Modulation
TCP - Transmisson Control Protocol
TX - Transmit
USB - Universial Serial Bus
1PPS – One Pulse Per Second

1 Introduction

1.1 General

This document is the User's Manual for the Lumistar LS-27-M Modular RF Downconverter/Receiver. This product represents Lumistar's 4th generation of the LS27 Series of RF Downconverters and replaces the previous generation of LS-27-B designs. In addition to RF downconversion functions, this product also provides an optional analog FM demodulation stage for each input channel. Consult Lumistar Sales for configuration and model number information.

The intent of this document is to provide physical, functional, and operational information for the end user including hardware configuration, interconnection, and software interfaces for the device.

The design implements a Digital Signal Processor Engine (DSPE) controlled superheterodyne downconverter with AM demodulation and optional FM demodulation. This receiver's physical size is similar to a standard 3 1/2 hard-disk format. The design can be housed in various chassis including a desktop fixture as well as a 1U rack mount version and other custom formats. The product provides one or two independent and autonomous multi-band downconversion stages. Each channel provides the conversion of up to five RF passbands to a 70MHz Intermediate Frequency (IF) output while providing AM demodulation of the input signal. The product's standard configuration provides eight software selectable IF bandwidth filters, roughly placed at octave intervals (or as ordered by the customer), to reduce channel noise bandwidth and improve adjacent channel rejection. The product line can optionally be equipped with an FM demodulation stage and fifteen video filters.

Table 1-1 provides specifications for electrical, mechanical, and operational characteristics of the LS-27-M product. A block diagram of the product design is shown in Figure 1-2.

Consult the web site for the most recent release of all related product documentation.

1.2 Document Outline

This document contains the following sections:

- Section 1 provides a document overview as well as a brief on the LS-27-M design
- Section 2 provides receiver theory of operation
- Section 3 provides hardware, cabling and operational instructions
- Section 4 provides communications and programming information
- Section 5 provides application software information

Throughout this document, several document flags will be utilized to emphasis warnings or other important data. These flags come in three different formats: Warnings, Cautions, and Information. Examples of these flags appear in Figure 1-1.

Warning:

(Critical Device Operational Information)

Caution:

(Cautionary Device Information)

Information:

(Emphasized Operational Information)

Figure 1-1 Document Flag Formats

1.3 List of Referenced Documents

Several documents were referenced in the making of this document. A list of these documents includes:

- Telemetry Standards: (IRIG-106-2015)
- User Datagram Protocol (RFC 768)

2 Theory of Operation

2.1 Device Brief

The LS-27-M is a sophisticated RF Downconverter Receiver with AM demodulation standard and an FM discrimination option. The device is hosted in the approximate footprint of a 3 ½ inch host computer hard drive. Each channel contains an independent multi-band RF to 70MHz downconverter, AM demodulation and filtering, extensive AGC processing and scaling programmability. These functions are designed specifically for antenna tracking applications. Future additions include second IF Automatic Frequency Control (AFC).

Some of the primary design objectives of the LS-27-M product line were to reduce the platform size, to provide an "OS-less" environment by eliminating product use of commercial software operating systems for functional processing, to provide easy and flexible field upgrade/enhancements capabilities, and to provide a network appliance for device control and data transport. The unit is controlled and monitored using a 100/10Mbps Ethernet interface with alternate controls being provided by USB, RS-232 or RS422 4-Wire interfaces. Using the provided documentation, customers can develop their own interface GUI, or choose to utilize the provided Lumistar network application. Lumistar also offers source code for its primary control application as a starting point for customer development.

At the heart of the modular design is a flexible and extensible DSP Engine. The device construction is via up to four hardware sections, referred to as "slices": RF, IF, Signal Processing and a Control Processing Engine. The slices can be configured as a whole set or as a subset to perform targeted functionality. New firmware personalities and/or control processing revisions are easily updated in the field. No need to return the unit for most modifications.

When configured as a tracking receiver the LS-27-M is capable of handling up to six frequency bands per channel anywhere from 70 MHz to greater than 6 GHz. Standard RF receiver functions are suited to antenna tracking applications providing AM demodulation and AGC feedback, downconversion, and best source AGC and AM selection. The unit constantly performs maintenance monitoring of various environmental parameters and alerts the user to out of boundary conditions. The application software contains functions for retaining setups as well as logging RSSI parameters as a function of time.

Device "slice" detail block diagrams are shown in Figure 2-1through Figure 2-4. Device specifications for the LS-27-M as a standalone entity are listed in Table 2-1. Device specifications for the LS-27-M mounted in the desktop chassis are listed in Table 2-2. Device specifications for the LS-27-M mounted in the 1U Rackmount 12" Deep chassis are listed in Table 3-1.

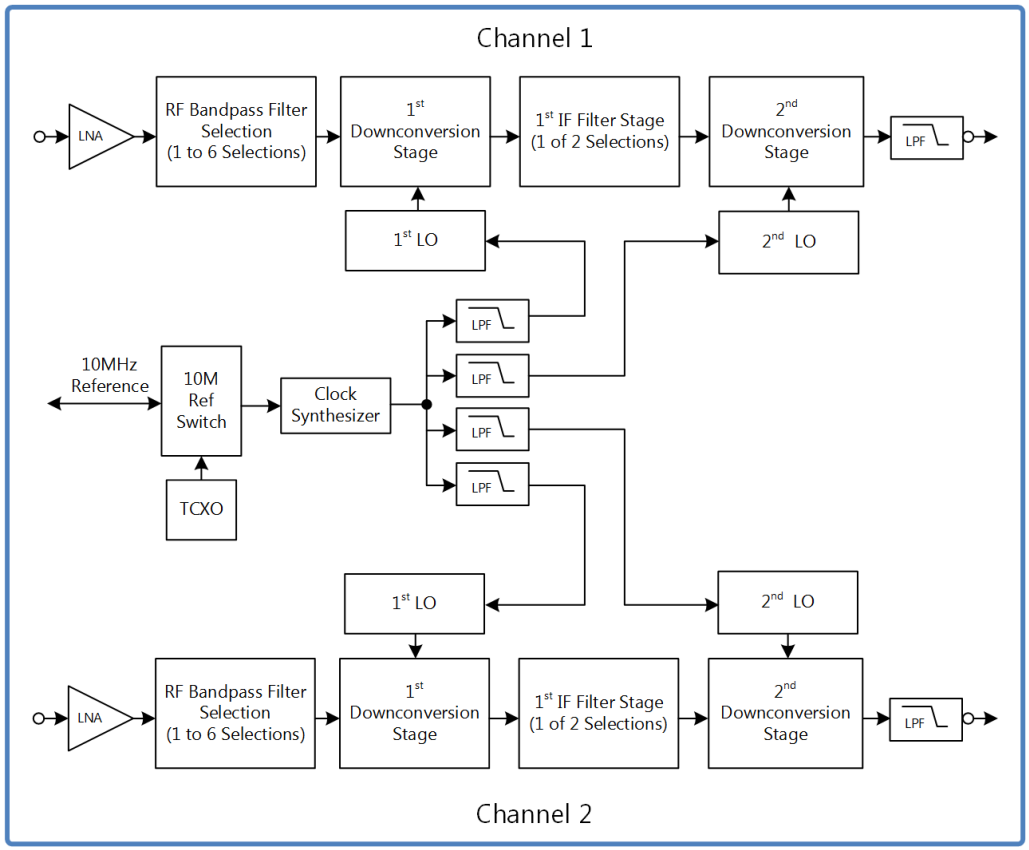

Figure 2-1 Block Diagram: Slice 1 - RF to IF Downconversion

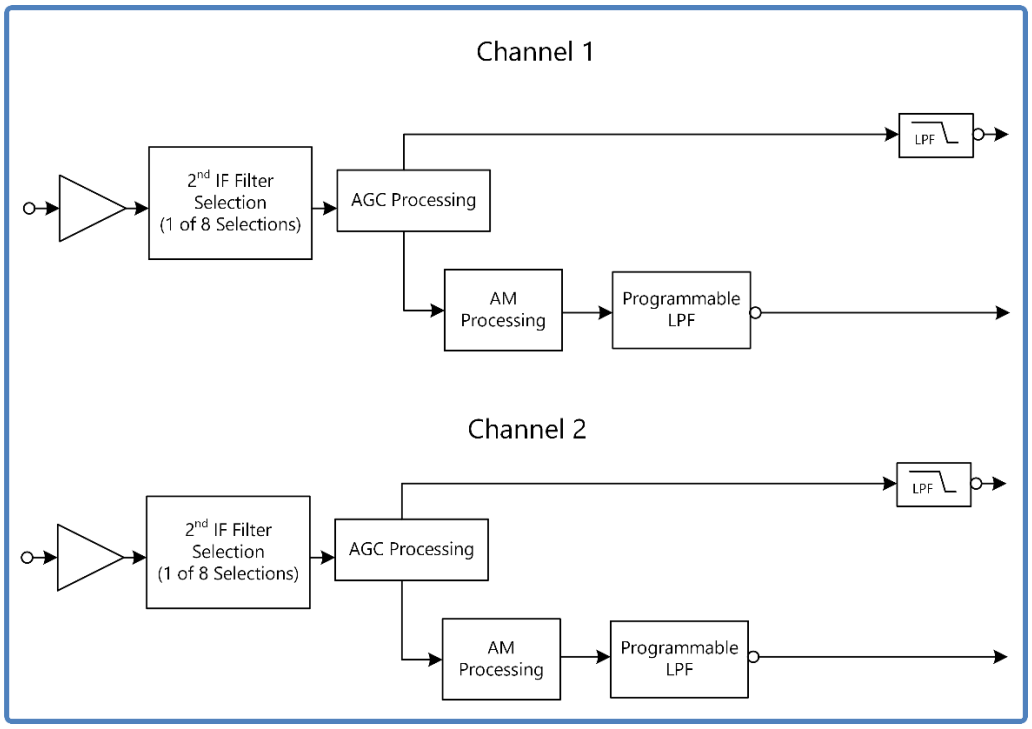

Figure 2-2 Block Diagram: Slice 2 - 2nd IF and Analog Processing

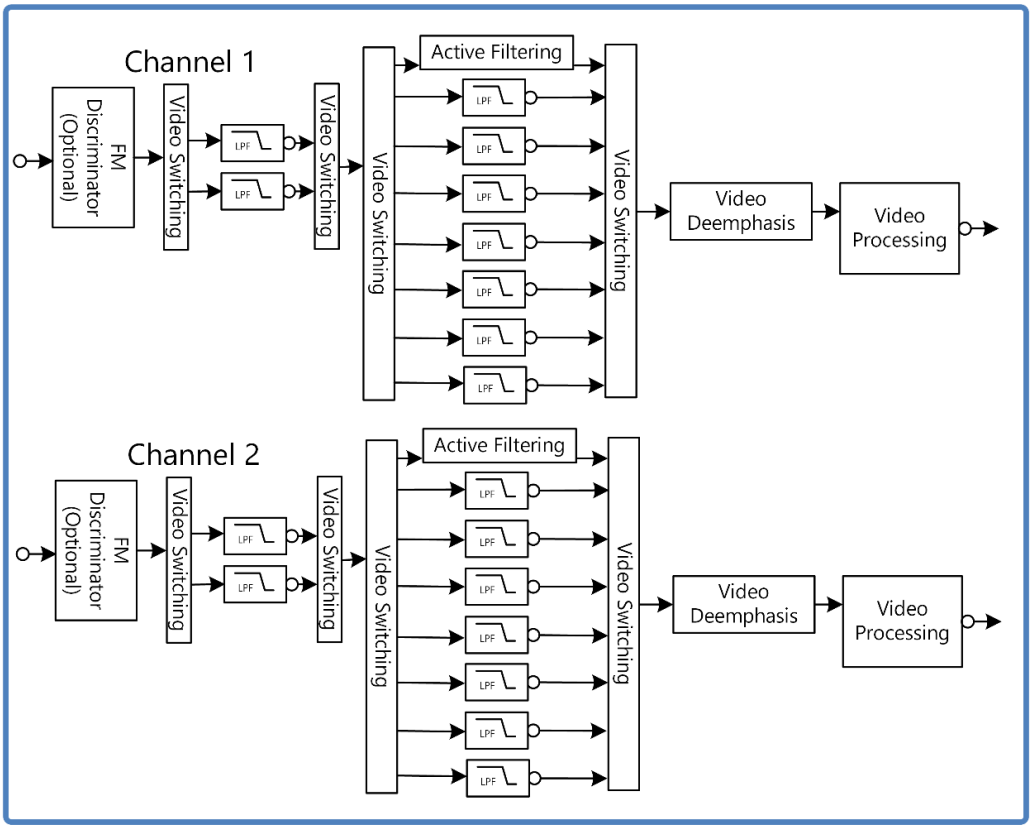

Figure 2-3 Block Diagram: Slice 3 – FM Video Discrimination and Processing

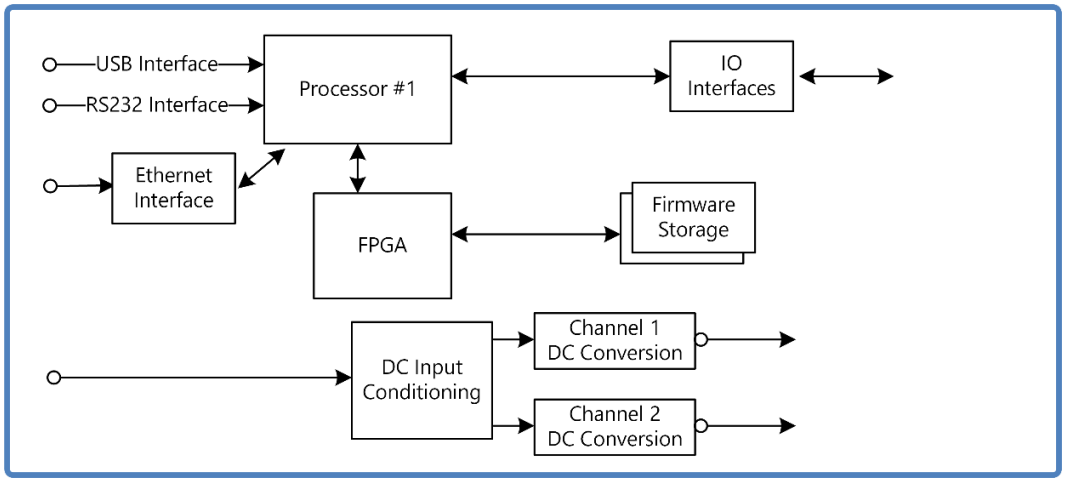

Figure 2-4 Block Diagram: Slice 4 – Processing, and DC Power Conversion

Category:	***Specifications:***	***Details:***
Mechanical	Envelope Dimensions ins. (mm.)	6.00 (152.4) L x 4.00 (101.6) W x 1.680 (42.67) H w/bottom plate
	Form Factor	Modular Brick
	Weight oz. (kgs)	~ 32oz. (~0.91kgs.)
Electrical	Individual power requirements	9-42VDC
	Total Power (both Channels)	~ 26 to 36 Watts (mode dependent)
MTBF	Calculated MIL-217F Notice 2; Parts Count Method	38,405 hours, Ground Fixed Environment, 50 degrees C nominal operating temperature;
Performance		
RF Tuner	RF Input Bands	Typ. Config. up to 5 Bands plus 70MHz
		Band range: 70MHz – 6.2GHz
	Tuner Resolution	50kHz (Typical); 2Hz minimum
	VSWR	1.5:1 Typical
	Frequency Accuracy	0.002% (Max.) 0.001% (Typical)
	RF Input AGC Range	+10dBm to –110dBm
	Input Level without Damage	+28dBm
	Receiver Input P_{1dB}	+10dBm (typical)
	Receiver Noise Figure	<= 5dB (typical @ threshold)
	70MHz Output Level	Typ. 0 dBm (+/- 1dBm); Adjustable
	SAW IF 3dB Bandwidths Available Data: Typical Antenna Tracking:	250kHz, 500kHz, 1MHz, 2MHz, 5MHz, 10MHz, 20MHz, 40MHz 120kHz, 250kHz, 500kHz, 1MHz, 1.5MHz, 2MHz, 5MHz, 8MHz
Demodulation	Types	Analog AM, Video FM, SS-PCMFM' 14MHz FM BW
	Video FM De-emphasis	Bypass, NTSC, PAL
	AM -3dB Frequency Response	50kHz (AM Low-pass Bypass Mode)
	AM Low-pass Filters	32 Software Selectable
	AM -3dB Bandwidths	50, 100, 200, 300, 400, 500, 600, 700, 800, 900, 1K, 1.1K, 1.2K, 1.3K, 1.4K, 1.5K, 1.6K, 1.7K, 1.8K, 1.9K, 2K, 3K, 4K, 5K, 6K, 7K, 8K, 9K, 10K, 15K, 20K, 50K Hz
	AM Output	2Vp-p @ 50% AM Index; 50 ohms; User adjustable
	Video Filtering 3dB Bandwidth (FM Option Required)	125K, 250K, 500K, 1M, 1.5M, 2M, 2.5M, 3M, 4.2M, 6M, 8M, 12M, 15M, 20M Hz
Receiver AGC	Range	+5V/-5V; unipolar and bipolar; user programmable slope and range
Connectors	External Reference In/Out	(1) SMB Jack
	RF Signal Input	(2) SMA Jack Receptacle
	IF Signal Output	(3) SMB Jack Receptacle
	Analog I/O Connector	(2) MicroDSub-15 Plug
	Power/Digital I/O Connector	(1) MicroDSub-25 Receptacle/Plug
Environmental	Temperature, Operational	-20° to 70° Celsius
	Temperature, Storage	-40° to 85° Celsius
	Humidity, non-condensing	<40° C 10-90%, >40° C 0-75%

Table 2-1 General LS-27-M Device Specifications Table

Category:	*Specifications:*	*Details:*
Mechanical	Envelope Dimensions in. (mm.)	8.00 (203.2) L x 5.25 (133.4) W x 2.639 (67.0) H [Including Feet]
	Unboxed Weight lbs. (kgs.)	3lbs. (1.36kgs.)
Electrical	Power Input Range	9-36VDC
	Total Power (both Channels)	~ 30 Watts
Performance	All Receiver Performance Parameters	(Same as that of the LS-27-M shown in **Error! Reference s ource not found.**)
DC Power Supply	Desktop mount in. (mm.)	8.20 (208) x 2.90 (73) x 1.6 (39)
	Manufacturer/Model	Inventus MWA220024A-12A
	Input Power	85-264VAC/47-63Hz; Auto Switching
	Weight lbs. (kgs.)	2.1 (0.95)
	Output Power	24VDC @ 9.2A or 18V @ 8.33A
Connectors	External Reference In/Out	(1) SMB Jack
	RF Signal Input	(2) SMA Jack Receptacle
	IF Signal Output	(2) SMB Jack Receptacle
	Analog I/O Connector	(2) MicroDSub-15 Plug
	Digital I/O Connector	(1) MicroDSub-25 Plug
	Power/Digital I/O Connector	(1) MicroDSub-25 Receptacle
	Chassis Power	(1) Switchcraft 62GB8FX 8-Pin DIN Connector *(alternate)* Pins 1,2,4,6: +VDC In Pins 3,5,7,8: +VDC Return
		(1) Amphenol PT02A-8-4P(025) *(alternate)* Pins A, C: +VDC In Pins B, D: +VDC Return
Environmental	Temperature, Operational	-20° to 70° Celsius
	Temperature, Storage	-40° to 85° Celsius
	Humidity, non-condensing	<40° C 10-90%, >40° C 0-75%
Safety and EMC	Emissions	EN55011 Class B, FCC Part 15; IEC-61000-3-2, 3; IEC61000-4-2 thru 6, 8, 11
	Immunity	EN61000-3-2, -3; EN6100-4-2 thru 6, 8, and 11
	Safety	UL 60601-1, IEC60601-1 2nd and 3rd Edition

Table 2-2 Desktop Rackmount Chassis - Device Specifications Table

Category:	*Specifications:*	*Details:*
Mechanical	Envelope Dimensions in. (mm.)	12.5 (317.5) L x 18.94 (481) W x 1.732 (44.0) H [BNC Excursion]
	Unboxed Weight lbs. (kgs.)	12.2lbs. (5.53kgs.)
Electrical	Power Input Range	90-264VAC / 47-63Hz
	Total Power (both Channels)	~ 50 Watts (mode and data rate dependent)
Performance	All Receiver Performance Parameters	(Same as that of the LS-27-M shown in **Error! Reference s ource not found.**)
Connectors	RF Signal Input	(2) N-Style Receptacle
	IF Signal Output	(2) BNC F Jack Receptacle
	Analog I/O Connector	(4) BNC F Jack Receptacle
	Auxiliary Digital/Analog IO	(1) HDSub-15 Receptacle (See Section **Error! Reference s ource not found.**)
	Serial Communications	(1) HDSub-15 Receptacle
	USB 2.0 Interface	(1) USB-B Receptacle
	Chassis Power	(1) IEC320-C14 AC Inlet
		(1) Amphenol PT02A-8-4P (025) *(alternate – custom order)* Pins A, C: +24VDC In Pins B, D: +24VDC Return
Environmental	Temperature, Operational	-40° to 70° Celsius
	Temperature, Storage	-40° to 85° Celsius
	Humidity, non-condensing	<40° C 10-90%, >40° C 0-75%
Safety and EMC	Emissions and Immunity	EN55011 Class B, FCC CFR 47 Part 18; IEC-61000-3-2, 3; IEC61000-4-2 thru 6, 8, 11
	Safety	IEC60601-1: 2005+A1: 2012, EN60601-1:2006+A11:2011+A1+A12, UL ANSI/AAMI ES60601-1

Table 2-3 1U Rackmount Chassis (12" Depth) - Device Specifications Table

3 Hardware Specifications, Cabling and Operations

This section will examine hardware design aspects including physical mounting of the device, electrical interface standards involved with the user connections, power and cooling of the device, and cabling options. This section will also provide specifications for various mechanical enclosures that the LS-27-M is delivered.

3.1 Mechanical Outline – Basic Receiver

The LS-27-M is described as a "brick" configuration having the same traditional footprint as a standard 3.5" host computer hard disk drive. Figure 3-1 provides a diagram of the top view of the device. Figure 3-2 illustrates that unit mounted on an optional mounting plate. Figure 3-3 shows the mounting plate option from a front view. Figure 3-4 illustrates the front-view mechanical configurations available.

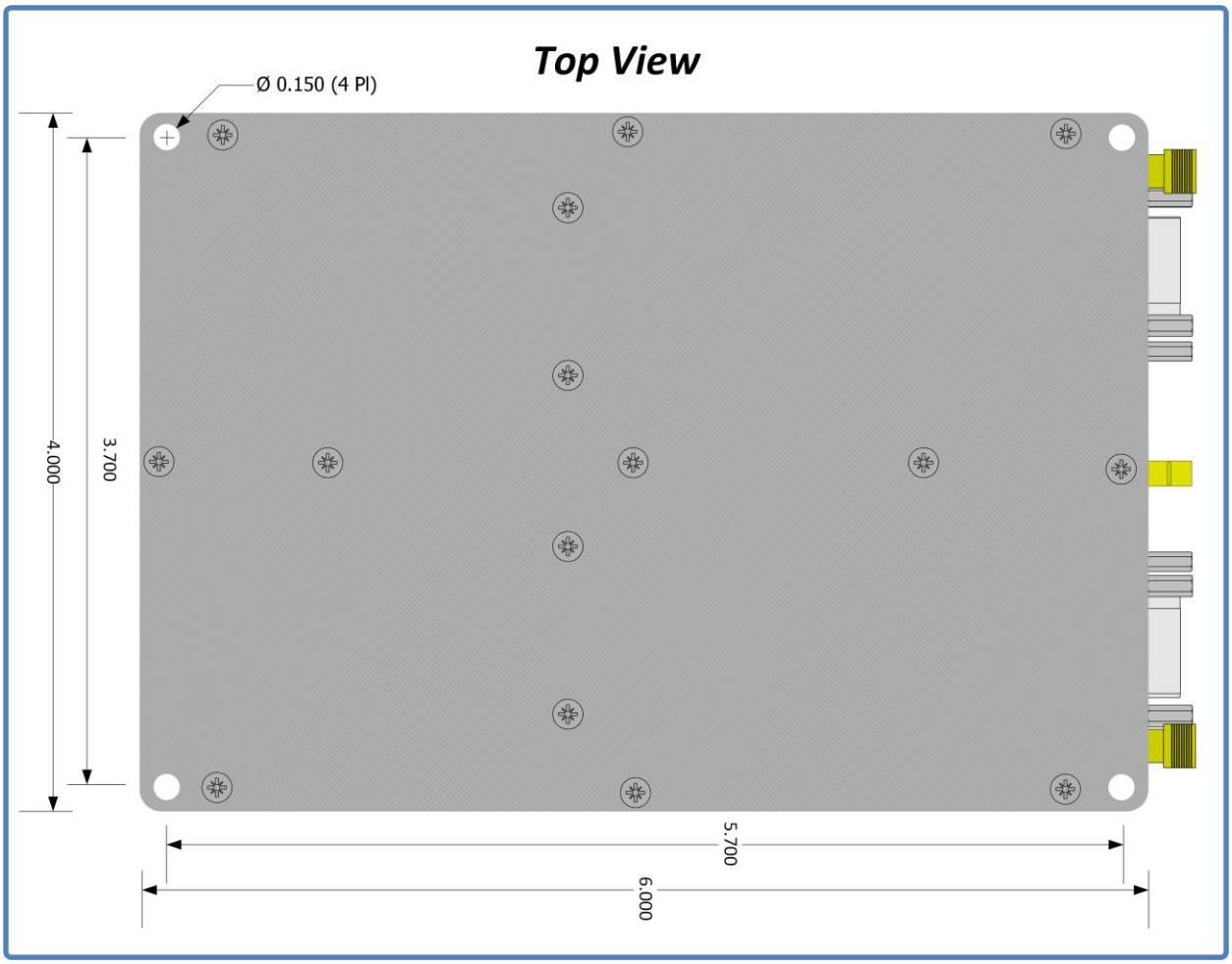

Figure 3-1 Representative Top View of the LS-27-M brick assembly

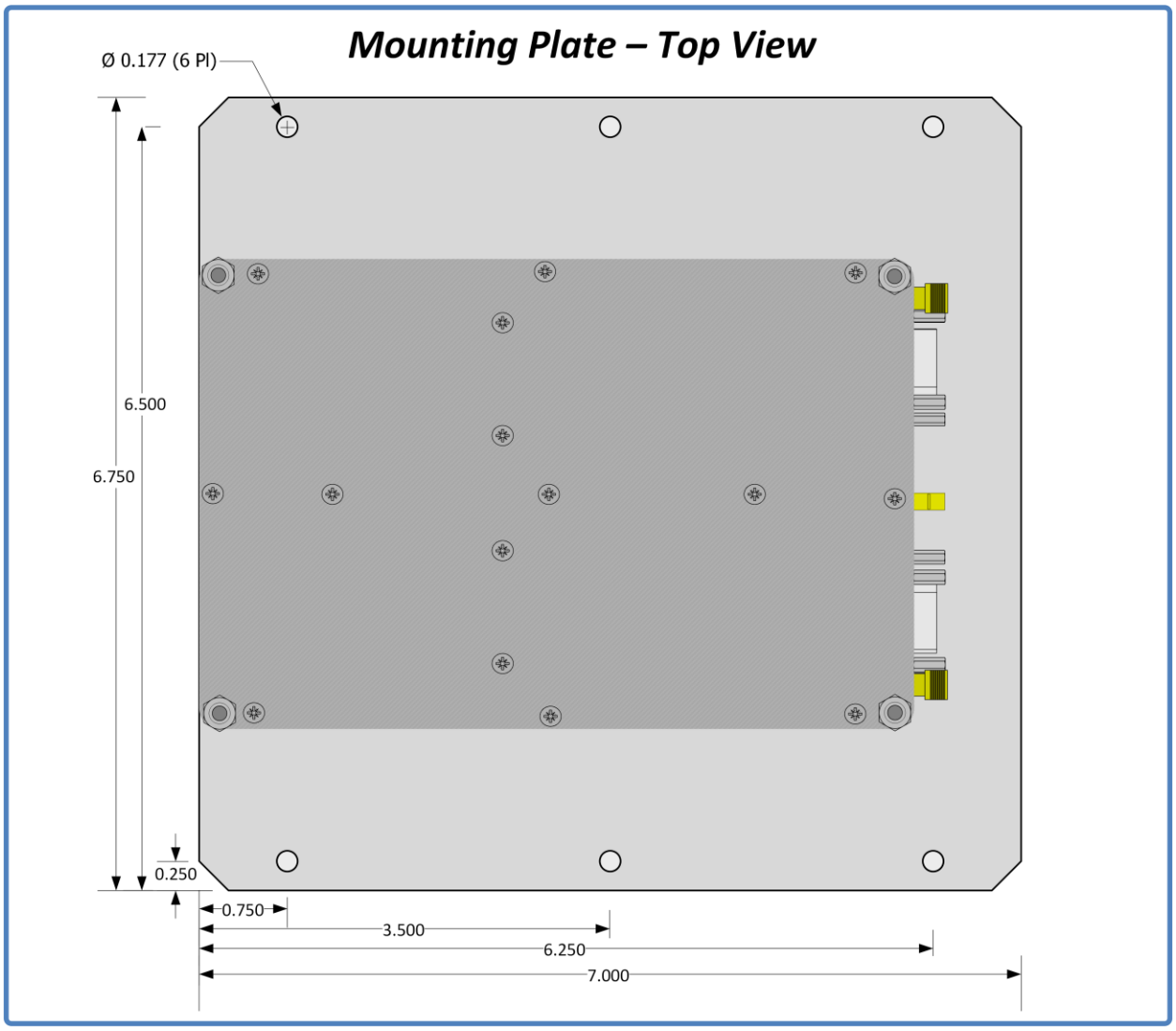

Figure 3-2 Representative Top View of the LS-27-M brick assembly mounted on optional Mounting Plate

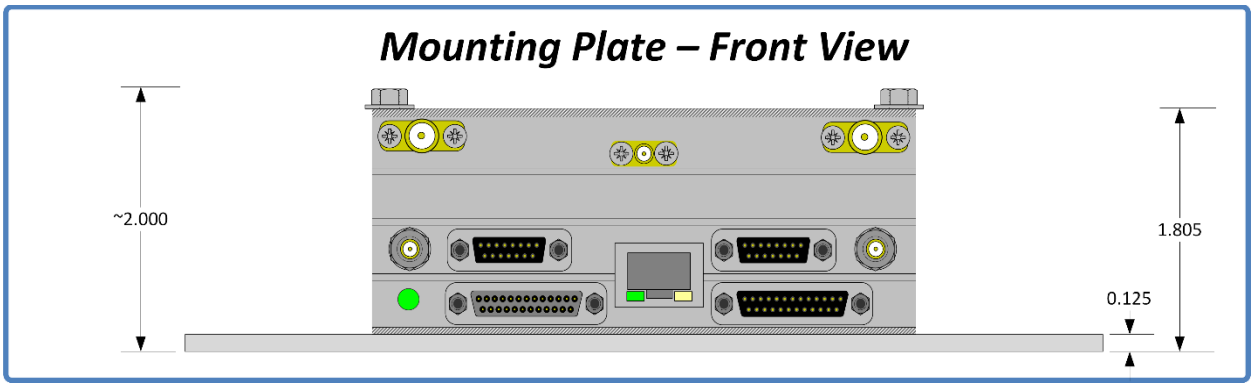

Figure 3-3 Representative front View of the LS-27-M brick assembly mounted on optional Mounting Plate

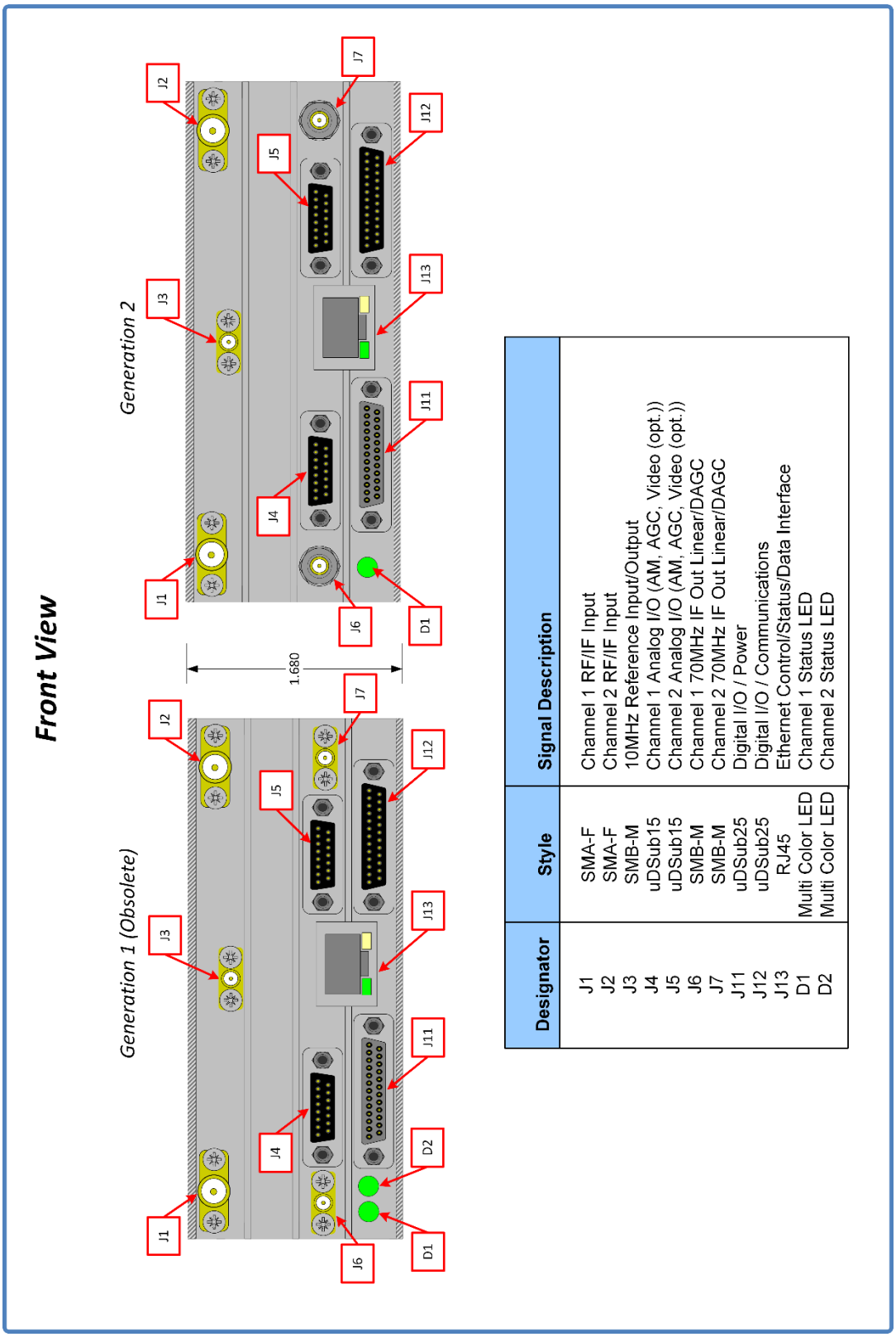

Designator	Style	Signal Description
J1	SMA-F	Channel 1 RF/IF Input
J2	SMA-F	Channel 2 RF/IF Input
J3	SMB-M	10MHz Reference Input/Output
J4	uDSub15	Channel 1 Analog I/O (AM, AGC, Video (opt.))
J5	uDSub15	Channel 2 Analog I/O (AM, AGC, Video (opt.))
J6	SMB-M	Channel 1 70MHz IF Out Linear/DAGC
J7	SMB-M	Channel 2 70MHz IF Out Linear/DAGC
J11	uDSub25	Digital I/O / Power
J12	uDSub25	Digital I/O / Communications
J13	RJ45	Ethernet Control/Status/Data Interface
D1	Multi Color LED	Channel 1 Status LED
D2	Multi Color LED	Channel 2 Status LED

Figure 3-4 Front-Views of the LS-27-M brick assembly

The device can be mounted using four UNC 6-32 or Metric 3 or 3.5mm machine screws. Total device height does not exceed 1.68 inches (42.67mm) so the length of the mounting screw will only depend on the desired number of mounting threads. UNC 6-32 Helicoils can be inserted into any of the mounting holes at the corner of the device which allows for flush mounting of the device from the bottom or top of the device.

The LS-27-M contains either one or two multi-color status LEDs on the front of the device. These are shown in Figure 3-3 and referenced as D1 and D2. The LEDs provide high-level functional status to the user and can be used in physical location of a particular device in the case that multiple devices have been deployed.

The LEDs are tri-color: RED, GREEN, BLUE. During normal operations, the front LEDS will blink BLUE at a very rapid pace directly after application of power. The LED will then proceed to pause on BLUE for an additional period. During this period of BLUE LED activity which last less than 10 seconds, no communications with the unit is possible. Once LEDs start alternating between GREEN and off with each state being active for a 1 second period, the unit has full communications ability.

There is a FLASH LED function call that is available that will toggle the LEDS between a RED and BLUE state for an approximate 8-second period via the application software. This is useful in verifying communications with the device and locating a specific unit.

If the unit D1/D2 LEDs are both toggling RED after boot, or after a change in operational mode is attempted, this indicates that the signal processing FPGAs were not successfully loaded leaving the unit non-functional from a signal processing standpoint. If this happens, the user should power the unit down for 120-seconds and then re-apply unit power. If after this power cycle the LEDs are still toggle RED, change operational modes and then re-attempt the 120-second power cycle. If the flashing red LEDs persist, contact customer service *for additional support*.

3.2 Interface Signals: Micro-D Sub Pin-outs

Figure 3-4 presents a front-view of the LS-27-M. This figure contains a reference table of LS-27-M interface connectors. This table makes reference to four Micro-D-Sub connectors. Figure 3-5 and Figure 3-6 provide detailed interface pinouts of the Micro-D connections of the LS-27-M.

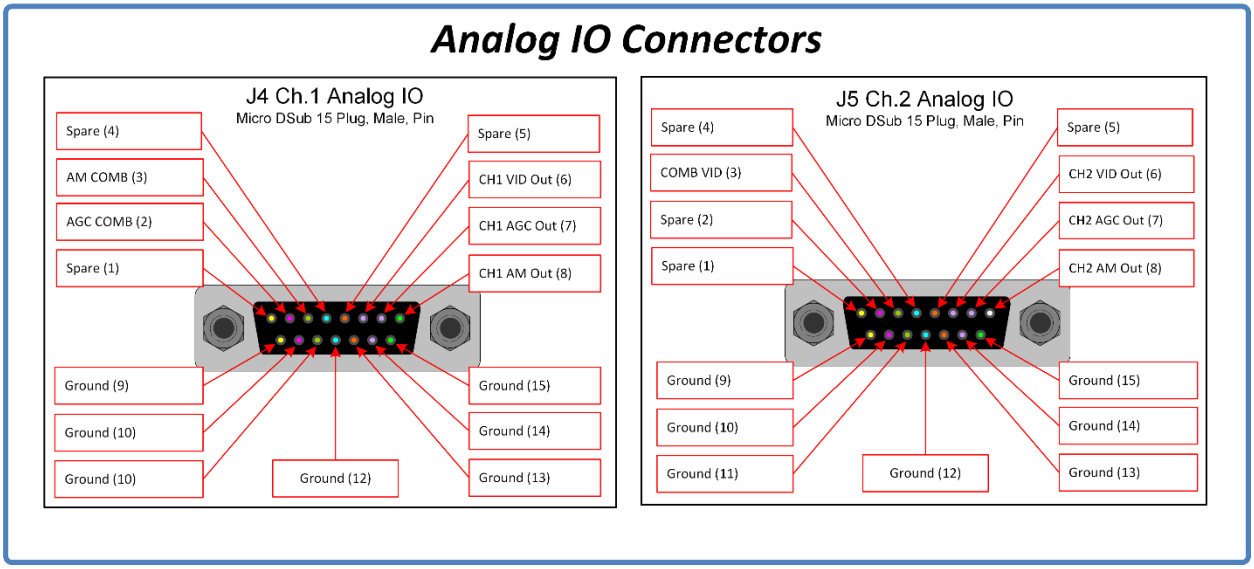

Figure 3-5 Revision 2 Cable: LS-27-M J4 and J5 Connector Pin-out Details

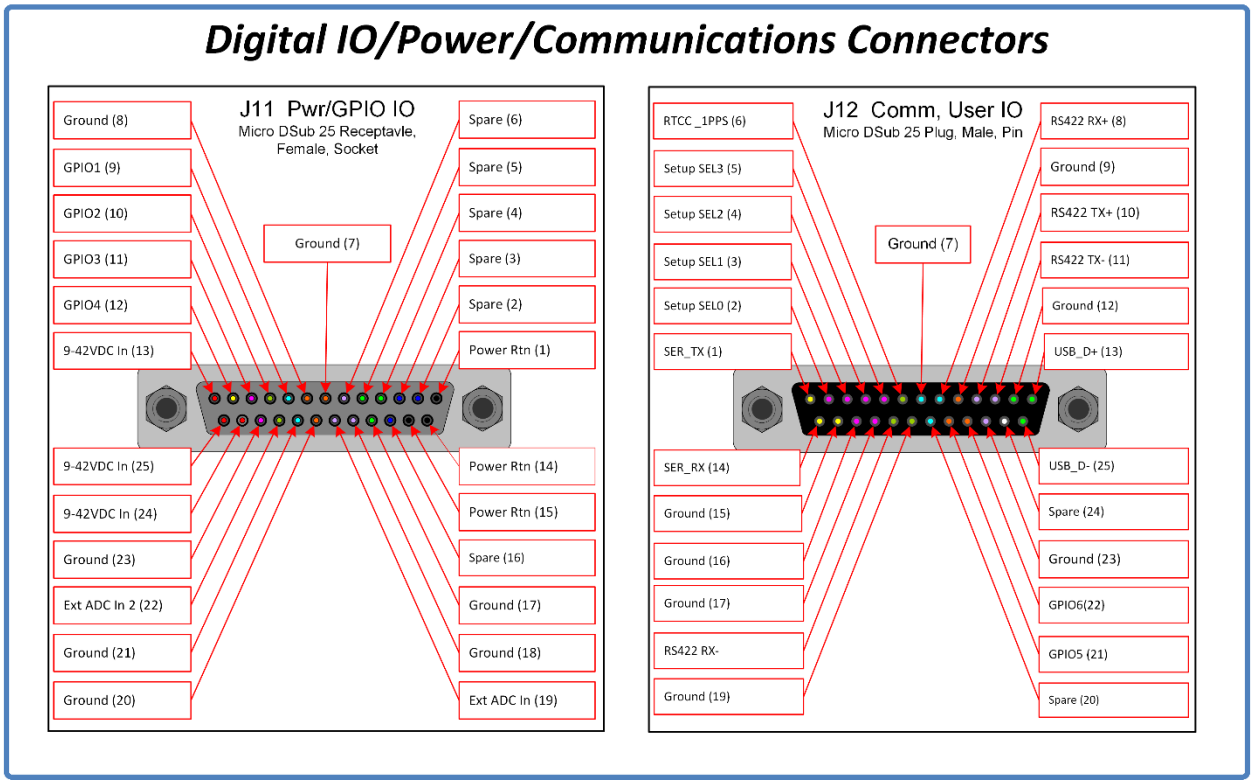

Figure 3-6 Revision 2 Cable: LS-27-M J11 and J12 Connector Pin-out Details

3.3 Interface Signals: Electrical Definitions/Characteristics

The interface signals of the LS-27-M vary in type and electrical complexity. There are several different types of signals deployed as detailed in Table 3-1.

Signal Name	Interface Direction	Interface Type	Input Voltage Range	Input Ω	Output Voltage	Output Ω	See Note
VID Out	O	Analog Video			0-4Vp-p	75Ω	1
VID Comb	O	Analog Video			0-4Vp-p	75Ω	1
AGC Out	O	Analog			+/-5V	50Ω	2
AGC Comb	O	Analog			+/-5V	50Ω	2
AM Out	O	Analog			0-6Vp-p	50/75Ω	3
AM Comb	O	Analog			0-6Vp-p	50/75Ω	3
9-42VDC In	PWR	Power	9-42VDC				4
Pwr Rtn	PWR	Power	GND				4
SER TX/RX	I/O	RS232 or RS422/RS485					5
USB_D+/-	I/O	USB 2.0					6

Notes:

1.) Analog video output levels are software adjustable.
2.) Output voltage is software selectable in terms of ranges and slopes. AGC Comb is "best source" combining.
3.) Bipolar analog signal. Output voltage is software selectable in terms of output gain. Output voltage level varies as a function of AM index. AM output impedance is software selectable. AM Comb is "best source" combining.
4.) DC input voltage can vary from 9V-42V. Per pin current limit is 3A.
5.) Serial communications transceiver is SW selectable. Default operating transceiver is RS232. Four-wire RS422/485 is also available. Only one transceiver is active at a time
6.) USB2.0 operation only. USB interface is active simultaneously with Serial and Ethernet interfaces.

Table 3-1 Primary IO Signal Electrical Definitions

3.4 Desktop chassis Cabling Interfaces

The LS-27-M in the Desktop chassis assembly is typically delivered with a set of four interface cables. These cables interface connections on the Micro D-Sub connections to more commonly available interface connections such as BNC, USB-B, DSub9 and HD15 connections.

Cables are not typically provided for the Ethernet interface, the SMA RF connections, or the SMB IF connections. Consult the Lumistar Factory if you are interested in the purchase of any of these cables.

Cables shipped are defined in detail in Figure 3-7 thru Figure 3-10 that follow. There are several cable and cabling options available, including cable kits for custom cable needs. Consult your Lumistar sales representative for details.

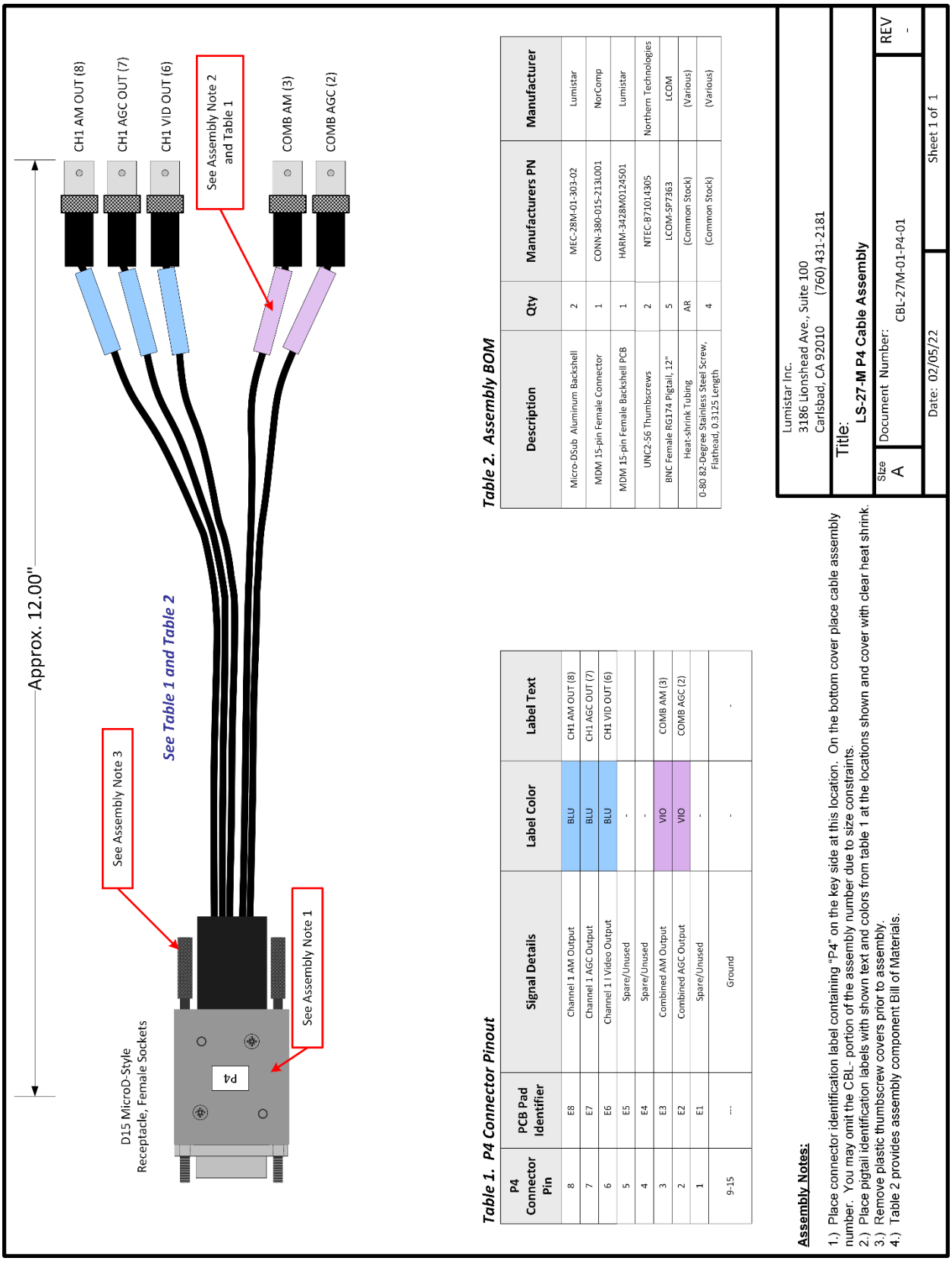

Figure 3-7 P4 User Interface Cable

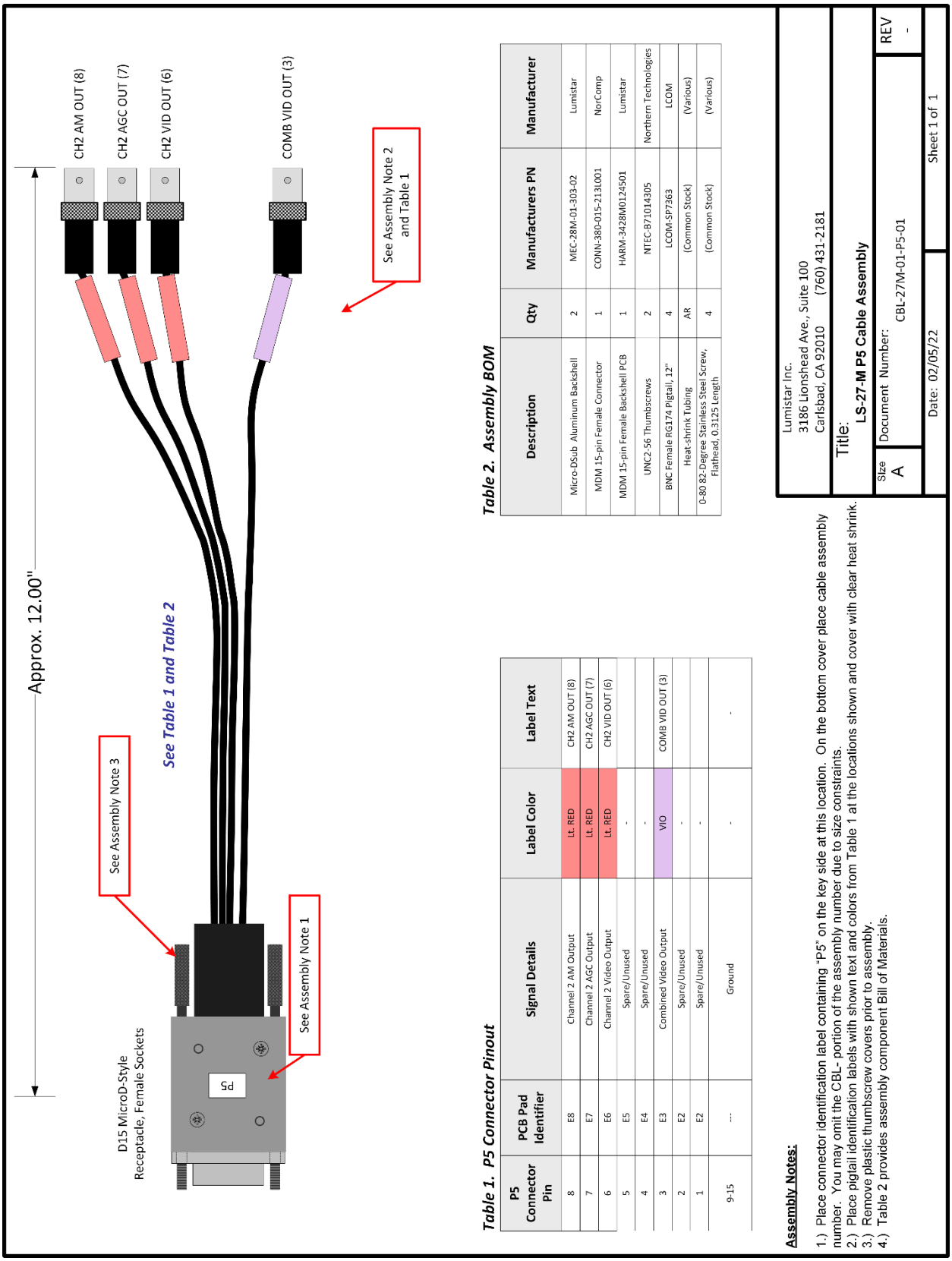

Table 1. P5 Connector Pinout

P5 Connector Pin	PCB Pad Identifier	Signal Details	Label Color	Label Text
8	E8	Channel 2 AM Output	Lt. RED	CH2 AM OUT (8)
7	E7	Channel 2 AGC Output	Lt. RED	CH2 AGC OUT (7)
6	E6	Channel 2 Video Output	Lt. RED	CH2 VID OUT (6)
5	E5	Spare/Unused	-	
4	E4	Spare/Unused	-	
3	E3	Combined Video Output	VIO	COMB VID OUT (3)
2	E2	Spare/Unused	-	
1	E2	Spare/Unused	-	
9-15	---	Ground	-	-

Table 2. Assembly BOM

Description	Qty	Manufacturers PN	Manufacturer
Micro-DSub Aluminum Backshell	2	MEC-28M-01-303-02	Lumistar
MDM 15-pin Female Connector	1	CONN-380-015-213L001	NorComp
MDM 15-pin Female Backshell PCB	1	HARM-3428M0124501	Lumistar
UNC2-56 Thumbscrews	2	NTEC-B71014305	Northern Technologies
BNC Female RG174 Pigtail, 12"	4	LCOM-SP7363	LCOM
Heat-shrink Tubing	AR	(Common Stock)	(Various)
0-80 82-Degree Stainless Steel Screw, Flathead, 0.3125 Length	4	(Common Stock)	(Various)

Assembly Notes:

1.) Place connector identification label containing "P5" on the key side at this location. On the bottom cover place cable assembly number. You may omit the CBL- portion of the assembly number due to size constraints.
2.) Place pigtail identification labels with shown text and colors from Table 1 at the locations shown and cover with clear heat shrink.
3.) Remove plastic thumbscrew covers prior to assembly.
4.) Table 2 provides assembly component Bill of Materials.

Figure 3-8 P5 User Interface Cable

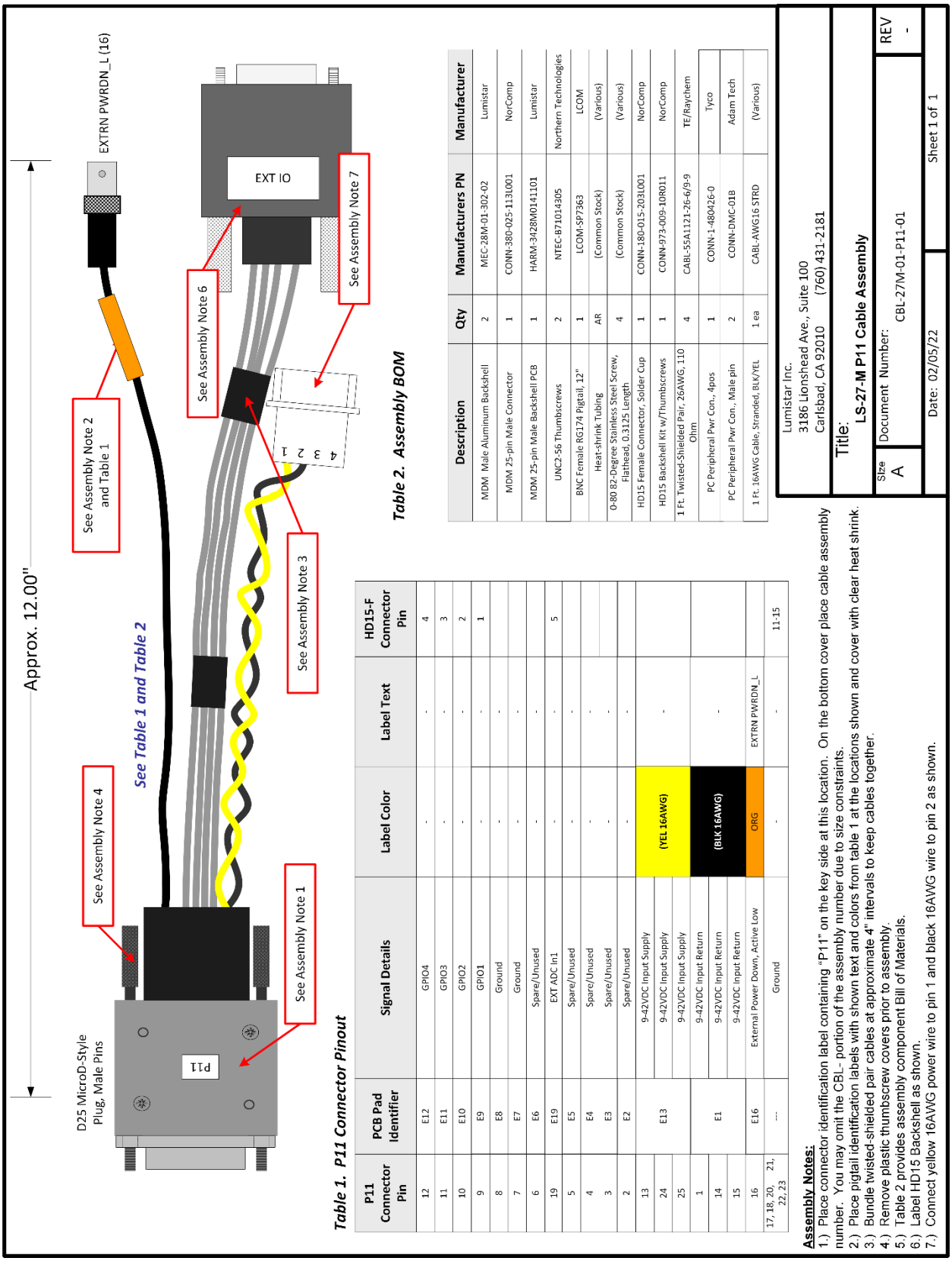

Table 1. P11 Connector Pinout

P11 Connector Pin	PCB Pad Identifier	Signal Details	Label Color	Label Text	HD15-F Connector Pin
12	E12	GPIO4	-	-	4
11	E11	GPIO3	-	-	3
10	E10	GPIO2	-	-	2
9	E9	GPIO1	-	-	1
8	E8	Ground	-	-	
7	E7	Ground	-	-	
6	E6	Spare/Unused	-	-	
19	E19	EXT ADC In1	-	-	5
5	E5	Spare/Unused	-	-	
4	E4	Spare/Unused	-	-	
3	E3	Spare/Unused	-	-	
2	E2	Spare/Unused	-	-	
13	E13	9-42VDC Input Supply	(YEL 16AWG)	-	
24		9-42VDC Input Supply			
25		9-42VDC Input Supply			
1	E1	9-42VDC Input Return	(BLK 16AWG)	-	
14		9-42VDC Input Return			
15		9-42VDC Input Return			
16	E16	External Power Down, Active Low	ORG	EXTRN PWRDN_L	
17, 18, 20, 21, 22, 23	---	Ground	-	-	11-15

Table 2. Assembly BOM

Description	Qty	Manufacturers PN	Manufacturer
MDM Male Aluminum Backshell	2	MEC-28M-01-302-02	Lumistar
MDM 25-pin Male Connector	1	CONN-380-025-113L001	NorComp
MDM 25-pin Male Backshell PCB	1	HARM-34228M0141101	Lumistar
UNC2-56 Thumbscrews	2	NTEC-871014305	Northern Technologies
BNC Female RG174 Pigtail, 12"	1	LCOM-SP7363	LCOM
Heat-shrink Tubing	AR	(Common Stock)	(Various)
0-80 82-Degree Stainless Steel Screw, Flathead, 0.3125 Length	4	(Common Stock)	(Various)
HD15 Female Connector, Solder Cup	1	CONN-180-015-203L001	NorComp
HD15 Backshell Kit w/Thumbscrews	1	CONN-973-009-10R011	NorComp
1 Ft. Twisted-Shielded Pair, 26AWG, 110 Ohm	4	CABL-55A1121-26-6/9-9	TE/Raychem
PC Peripheral Pwr Con., 4pos	1	CONN-1-480426-0	Tyco
PC Peripheral Pwr Con., Male pin	2	CONN-DMC-01B	Adam Tech
1 Ft. 16AWG Cable, Stranded, BLK/YEL	1 ea	CABL-AWG16 STRD	(Various)

Assembly Notes:

1.) Place connector identification label containing "P11" on the key side at this location. On the bottom cover place cable assembly number. You may omit the CBL- portion of the assembly number due to size constraints.
2.) Place pigtail identification labels with shown text and colors from table 1 at the locations shown and cover with clear heat shrink.
3.) Bundle twisted-shielded pair cables at approximate 4" intervals to keep cables together.
4.) Remove plastic thumbscrew covers prior to assembly.
5.) Table 2 provides assembly component Bill of Materials.
6.) Label HD15 Backshell as shown.
7.) Connect yellow 16AWG power wire to pin 1 and black 16AWG wire to pin 2 as shown.

Figure 3-9 P11 User Interface Cable

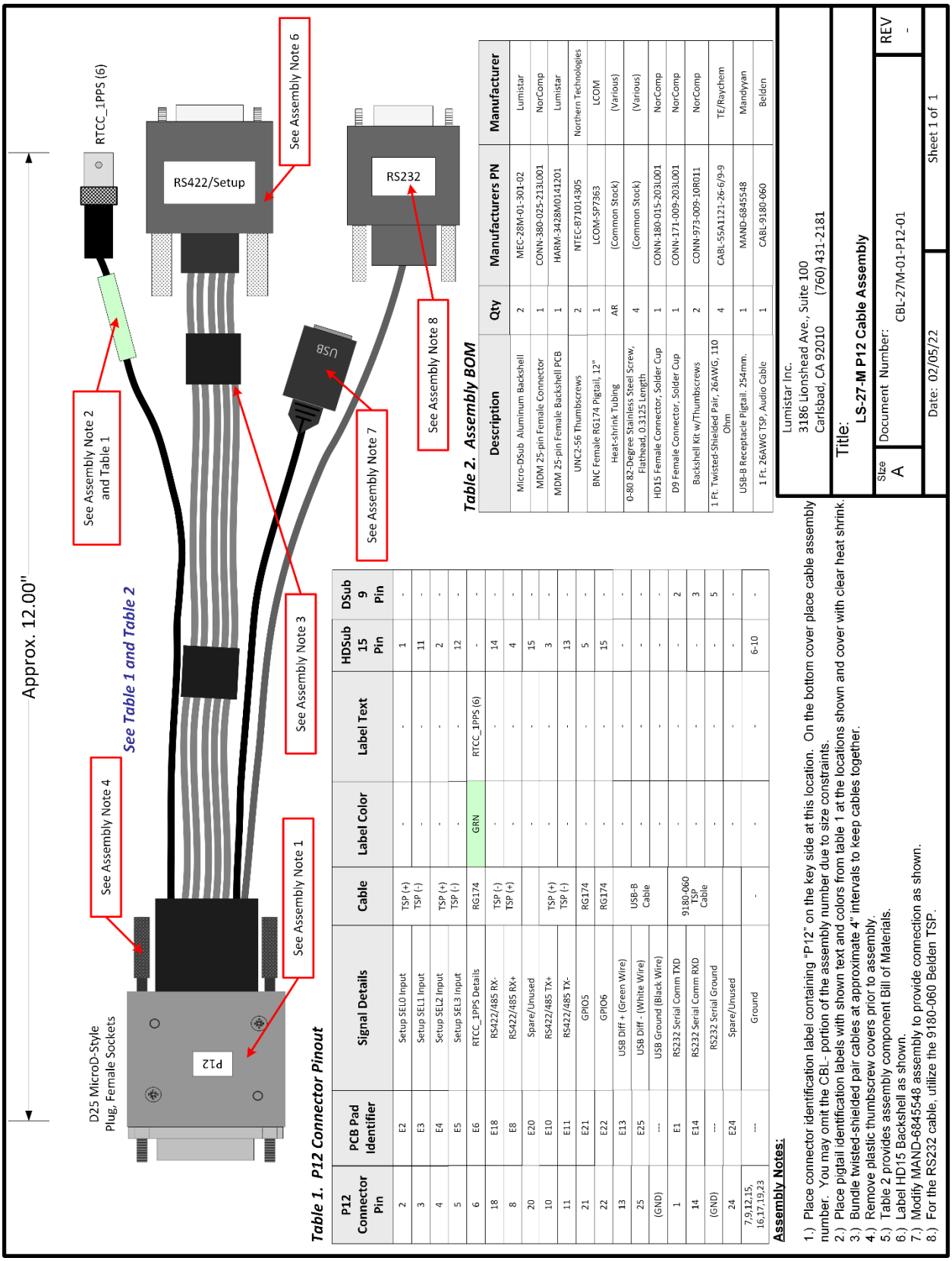

Table 1. P12 Connector Pinout

P12 Connector Pin	PCB Pad Identifier	Signal Details	Cable	Label Color	Label Text	HDSub 15 Pin	DSub 9 Pin
2	E2	Setup SEL0 Input	TSP (+) TSP (-)	-	-	1	-
3	E3	Setup SEL1 Input		-	-	11	-
4	E4	Setup SEL2 Input	TSP (+) TSP (-)	-	-	2	-
5	E5	Setup SEL3 Input		-	-	12	-
6	E6	RTCC_1PPS Details	RG174	GRN	RTCC_1PPS (6)	-	-
18	E18	RS422/485 RX-	TSP (-) TSP (+)	-	-	14	-
8	E8	RS422/485 RX+		-	-	4	-
20	E20	Spare/Unused		-	-	15	-
10	E10	RS422/485 TX+	TSP (+) TSP (-)	-	-	3	-
11	E11	RS422/485 TX-		-	-	13	-
21	E21	GPIO5	RG174	-	-	5	-
22	E22	GPIO6	RG174	-	-	15	-
13	E13	USB Diff + (Green Wire)	USB-B Cable	-	-	-	-
25	E25	USB Diff - (White Wire)		-	-	-	-
(GND)	---	USB Ground (Black Wire)		-	-	-	-
1	E1	RS232 Serial Comm TXD	9180-060 TSP Cable	-	-	-	2
14	E14	RS232 Serial Comm RXD		-	-	-	3
(GND)	---	RS232 Serial Ground		-	-	-	5
24	E24	Spare/Unused		-	-	-	-
7,9,12,15, 16,17,19,23	---	Ground	-	-	-	6-10	-

Table 2. Assembly BOM

Description	Qty	Manufacturers PN	Manufacturer
Micro-DSub Aluminum Backshell	2	MEC-28M-01-301-02	Lumistar
MDM 25-pin Female Connector	1	CONN-380-025-213L001	NorComp
MDM 25-pin Female Backshell PCB	1	HARM-3428M0141201	Lumistar
UNC2-56 Thumbscrews	2	NTEC-B71014305	Northern Technologies
BNC Female RG174 Pigtail, 12"	1	LCOM-SP7363	LCOM
Heat-shrink Tubing	AR	(Common Stock)	(Various)
0-80 82-Degree Stainless Steel Screw, Flathead, 0.3125 Length	4	(Common Stock)	(Various)
HD15 Female Connector, Solder Cup	1	CONN-180-015-203L001	NorComp
D9 Female Connector, Solder Cup	1	CONN-171-009-203L001	NorComp
Backshell Kit w/Thumbscrews	2	CONN-973-009-10R011	NorComp
1 Ft. Twisted-Shielded Pair, 26AWG, 110 Ohm	4	CABL-55A1121-26-6/9-9	TE/Raychem
USB-B Receptacle Pigtail, 254mm.	1	MAND-6845548	Mandyan
1 Ft. 26AWG TSP, Audio Cable	1	CABL-9180-060	Belden

Assembly Notes:

1.) Place connector identification label containing "P12" on the key side at this location. On the bottom cover place cable assembly number. You may omit the CBL- portion of the assembly number due to size constraints.
2.) Place pigtail identification labels with shown text and colors from table 1 at the locations shown and cover with clear heat shrink.
3.) Bundle twisted-shielded pair cables at approximate 4" intervals to keep cables together.
4.) Remove plastic thumbscrew covers prior to assembly.
5.) Table 2 provides assembly component Bill of Materials.
6.) Label HD15 Backshell as shown.
7.) Modify MAND-6845548 assembly to provide connection as shown.
8.) For the RS232 cable, utilize the 9180-060 Belden TSP.

Figure 3-10 P12 User Interface Cable

3.5 Chassis/Case Options

Lumistar offers an array of delivery options for the LS-27-M. These include:

- Desktop Chassis – Compact desktop arrangement with force air cooling. Includes desktop power supply.
- 1U 19" Rackmount Chassis (Short) – 12" depth solution for rack mounting.

3.5.1 Desktop Chassis

Lumistar offers an optional LS-27-M desktop chassis that provides mounting, power cabling provisions, and cooling functions for the LS-27-M. The fixture comes with a desktop AC to DC power converter.

This unit is shown in Figure 3-11. The fixture can be operated on input voltages between 9 and 36VDC. In addition, fixtures can be stacked and mounted together as shown in Figure 3-12. The overall mechanical dimensions of the desktop chassis are shown in Figure 3-13. Mounting dimensions for the lower section of the housing are provided in Figure 3-14.

Power interface is provided via two connector styles: an 8-pin DIN connector or a MIL-DTL-26482 4-pin bayonet twist-lock connector. Consult Lumistar sales for ordering options.

Figure 3-11 LS-27-M Desktop chassis –ISO view

Figure 3-12 LS-27-M Desktop chassis – Stacked ISO view

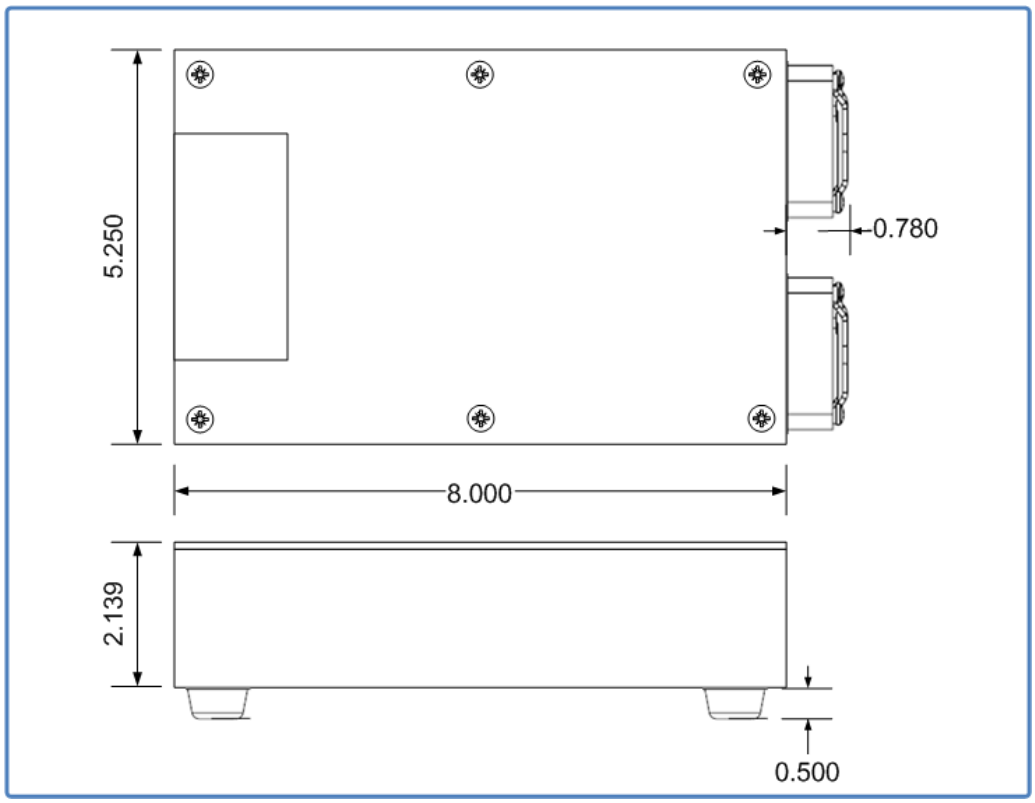

Figure 3-13 LS-27-M Desktop chassis – Envelope Dimensions

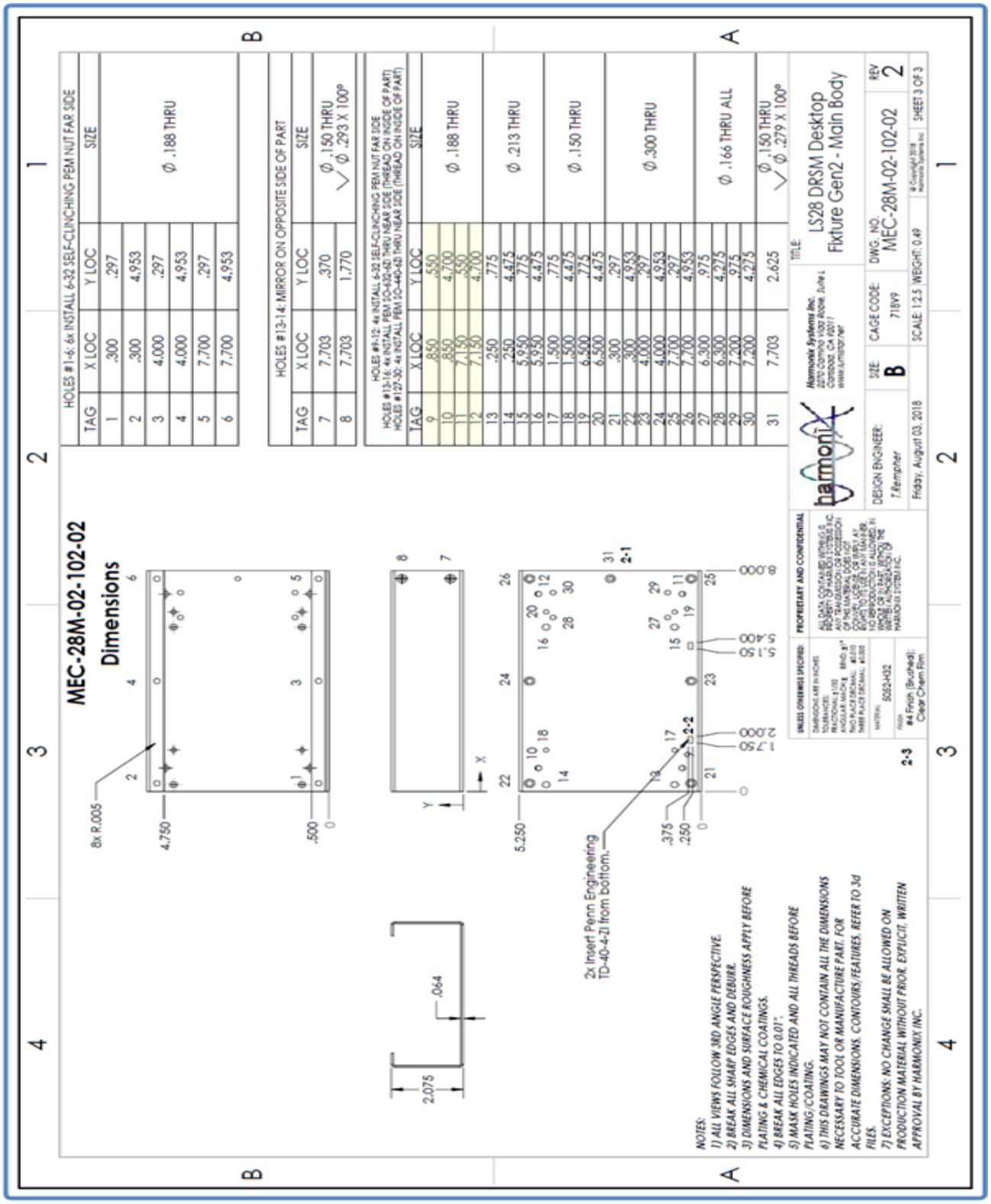

Figure 3-14 LS-27-M Desktop chassis – Lower Housing Mounting Points

3.5.2 1U 12" LS-27-M Chassis

Lumistar offers the LS-27-M designs in 19" 1U rackmount configuration.

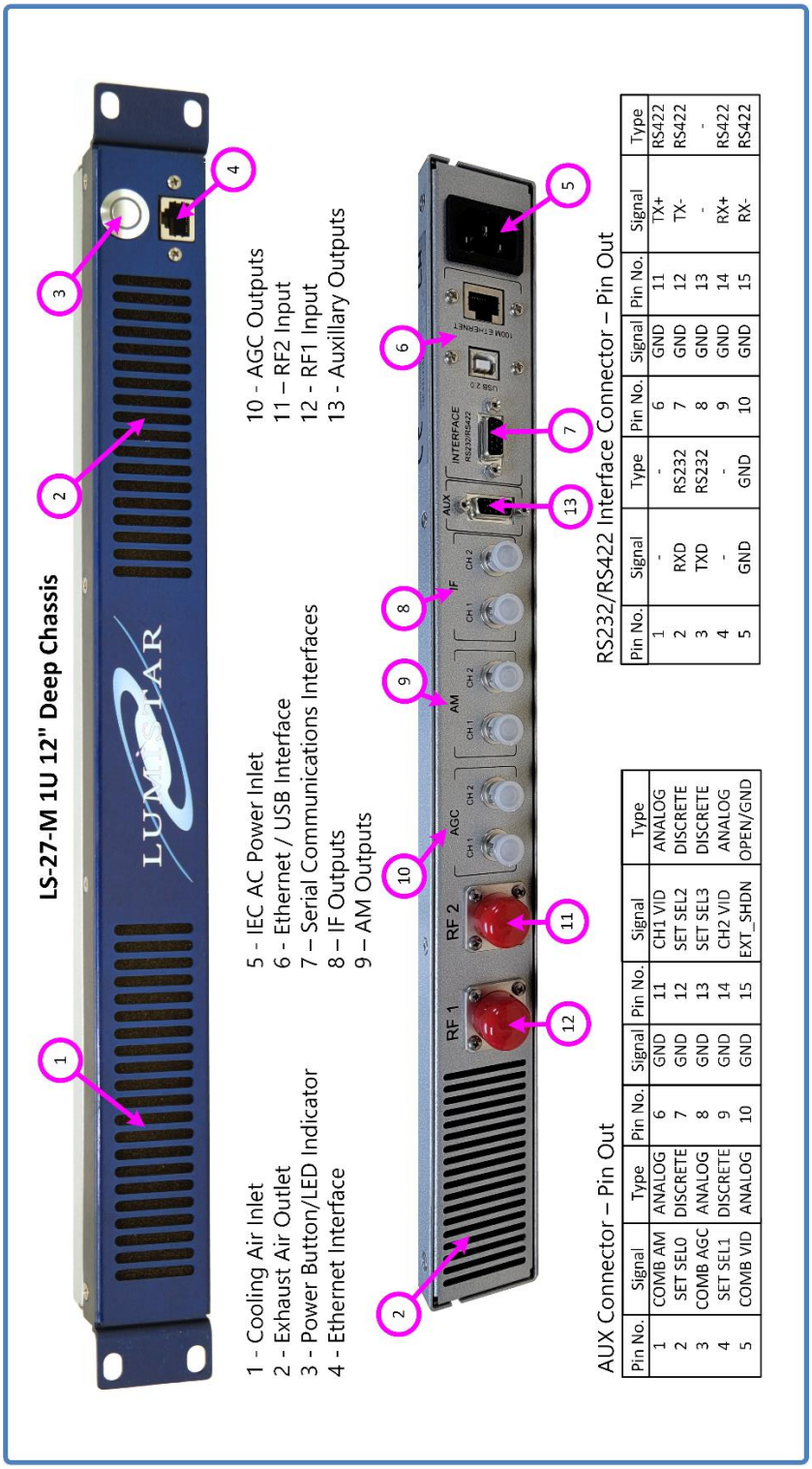

AUX Connector – Pin Out

Pin No.	Signal	Type	Pin No.	Signal	Pin No.	Signal	Type
1	COMB AM	ANALOG	6	GND	11	CH1 VID	ANALOG
2	SET SEL0	DISCRETE	7	GND	12	SET SEL2	DISCRETE
3	COMB AGC	ANALOG	8	GND	13	SET SEL3	DISCRETE
4	SET SEL1	DISCRETE	9	GND	14	CH2 VID	ANALOG
5	COMB VID	ANALOG	10	GND	15	EXT_SHDN	OPEN/GND

RS232/RS422 Interface Connector – Pin Out

Pin No.	Signal	Type	Pin No.	Signal	Pin No.	Signal	Type
1	-	-	6	GND	11	TX+	RS422
2	RXD	RS232	7	GND	12	TX-	RS422
3	TXD	RS232	8	GND	13	-	-
4	-	-	9	GND	14	RX+	RS422
5	GND	GND	10	GND	15	RX-	RS422

Figure 3-15 LS-27-M 1U 12" Chassis Front and Rear Panels

The 12" deep 1U LS-27-M chassis requires an external host PC to run the application software to control and status the LS-27-M. The chassis contains the receiver and all power and cooling provisions. The chassis also contains an unmanaged 100/10Mbps Ethernet 5-Port Switch (model: Netgear GS305-100PAS) for network connections between the internal receiver and the front and rear panel mounted Ethernet connectors. The 12" version of the chassis can be offered with optional DC power input. Consult with the Lumistar sales for availability. In the case that DC power provision is elected, the AC power connector on the rear of the chassis is replaced with an Amphenol PT02A-8-4P (025) bayonet power connector. This unit is **not** delivered with an auxiliary (AUX) interface cable or an interface connection to the serial connector. If these are required, consult Lumistar Sales for availability. Overall specifications and the pin connections of the DC connector are listed in Table 2-3.

3.6 Cooling and Thermal Conditioning

The LS-27-M must maintain a satisfactory operating temperature range to ensure sustainable functionality. It is **highly recommended** that provisions for forced air are used to cool the device during operation. The unit itself provides a heat load during typical operations which typically reaches 24 to 26 Watts.

The design is constructed from aluminum which is where all generated heat is directed. The sides of the unit are the primary heat sinking area. Although the top and bottom surfaces of the device will dissipate heat, they act in a secondary role to the sides of the device. This fact is what drives the design of our desktop chassis. In this fixture, we provide approximately 40.6 Cubic Feet per Minute (CFM) of airflow which is directed around the sides of the chassis.

Of course, ambient temperature of the applied forced air is also a factor. In general, the maximum operating temperature of **the unit should not exceed 70 degrees C for extended periods**. Its optimal operational temperature should be maintained in the 40-60 degree C range.

The user must maintain awareness of the ambient ingested air. Conditions such as barometric pressure, the amount of moisture in the air, and air temperature will affect the cooling capacity of inlet air. If the ambient air temperature is already 40 degrees Celsius, the cooling efficiency of this input air is very limited.

Warning:

If the unit temperature exceeds 70 degree Celsius, degraded operation may occur. Steps should be taken to provide properly cooling to ensure continued operation.

4 Communications and Programming Interface

The LS-27-M can communicate through one of three physical interface paths. The three interfaces include: an RS-232 (or selectable RS-422/485 4-Wire) serial interface, a USB 2.0 serial interface, and a 10/100 Ethernet serial interface. Each of these interfaces function simultaneously.

Information:

In the event that there is simultaneous communications on more than one serial interface, the last commanding interface would control the operating state of the LS-27-M.

Caution:

No command and control interface is provided priority over any other.

4.1 Serial/USB Interface

The LS-27-M provides a simple RS-232 serial interface. The asynchronous interface lacks flow-control and thus operates as a three-wire (transmit, receive, and ground) physical connection. As delivered, the interface operates at 57.6K BAUD using 8 data bits, 1 start bit, 1 stop bit and no parity. This interface transceiver can be switched to an RS-422 4-wire differential transceiver by a software selection available in the user application. Only one serial transceiver can be active after boot. The default transceiver selection is RS232 unless the customer instructs the alternate selection at time of purchase.

The LS-27-M provides a USB 2.0 serial interface. Included with the delivery is a driver installation that converts the USB serial interface into a standard MS Windows or Linux COM port for simplifying the interface. As delivered, the interface typically communicates at 57.6K BAUD using 8 data bits, 1 start bit, 1 stop bit and no parity. The speed can be increased dramatically to a maximum of 921.6K BAUD. Lumistar provides a USB driver interface installation package to support the USB port. This package is located on the software installation disk and must be installed on the host platform prior to use of the USB interface.

4.2 Ethernet Network Interface

The LS-27-M provides a 10/100Mbps Ethernet interface. This interface is considered the "primary" and the most capable device interface.

The interface data speed is automatically detected and switched by the interface hardware. Communications is provided via the Internet Protocol (IP) [IPv4] suite via two transport layer communications protocols: Transmission Control Protocol (TCP), and User Datagram Protocol (UDP). The TCP protocol is utilized for commanding and general status from the device. The UDP protocol is used in the device "discovery" process. Broadcast UDP messages are used in identifying devices on a network.

Typical Port assignments are port 5000. The unit allows for IP address selection, static and DHCP address assignments, subnet mask assignment, and gateway assignments.

4.2.1 Initial setup of the Network Interface for the LS-27-M

The LS-27-M is delivered configured with a **Static IP Address**. The primary default address is **192.168.1.27**. If the user desires that the unit be switched to a different static IP address, or to Dynamic Host Configuration Protocol (DHCP) mode, a controlling host set to the same sub-net mask will be required so the setup can be completed.

Configuring hosts communication between various network configurations is operating system dependent and will be generally outlined below. Slight operating system variations in functional screens may exist and will be up to the user to interpret.

Information:
Network configuration, connection and security typically require consent and access privileges from a network system administrator. The sections that follow attempt to describe the necessary steps that need to be taken in a rather "Open" network environment. Specific requirements in terms of network security and connection routing are the user's responsibility. Please contact your system administrator before going further.

4.3 Protocol and Messaging

This chapter provides interface protocol information for the LS-27-M receiver. The product is offered in single channel format in which case only the channel 1 commands will be responded to.

4.3.1 Protocol

The LS-27-M supports the traditional protocol of all existing LS-27-B product families as well as "extended" LS-27-M series commands. By default, the LS27 protocol is backwards compatible with all previous generations of the LS-27-B products. The LS-27-M series of commands will be additions to the existing set of LS-27-B commands.

4.3.1.1 Command and Status Messaging – LS27 Protocol

Interface to the LS-27-M is via command-response messaging. For every command sent from the host, the receiver will respond to indicate that the command was received, at a minimum. If commands are sent requesting status additional bytes of data will also be returned in the response. Commands from the host are grouped in two categories: primary commands and secondary commands. Primary commands are used to control the basic tuning and setup of the receiver. Secondary commands are used to set various operational modes and to obtain secondary status. Secondary host commands occasionally require that the host send two commands: a first command followed by a status request message.

All host messages require a message header of six (6) bytes. If the host command requires additional data be transferred to the host, the data will immediately follow the command header. Figure 4-1 contains a diagram of the message header for the interface protocol.

The first byte of the message header contains a device identification flag of 0x27. The second byte indicates the module address being commanded which should always be set to 0x00. Bytes 3 and 4 contain the message identification. Message identification informs the type and format of data that will follow the header, if any. Bytes 5 and 6 of the message header indicate the number of command related bytes that follow the message header.

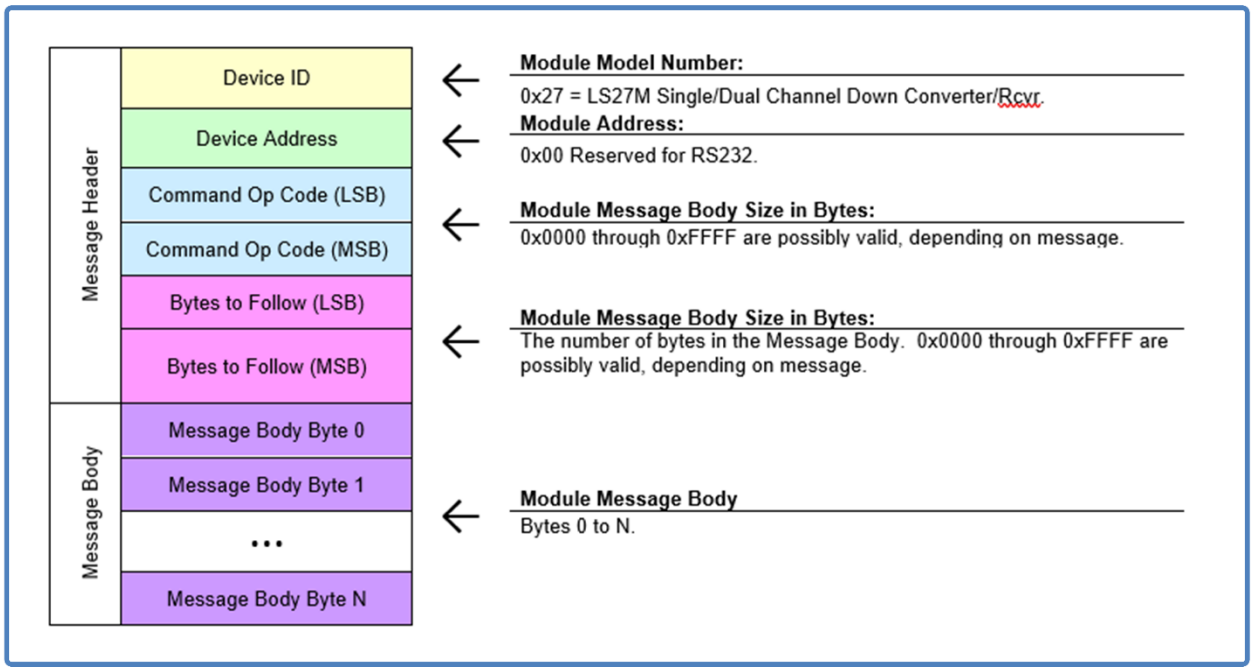

Figure 4-1 Message Header – LS-27 Protocol

In response to any host command, the protocol will respond with a minimum of an echoed message header. If additional information is to be conveyed to the host, the data will immediately follow the echoed header. Figure 4-2 indicates the general configuration of the host and terminal message transactions.

There are five message types in the traditional LS-27-B command/status protocol: a "Ping" message, a "Primary Setup" message, a "Secondary Setup" message, a "General Status" message, and a "EEPROM Page Read" message.

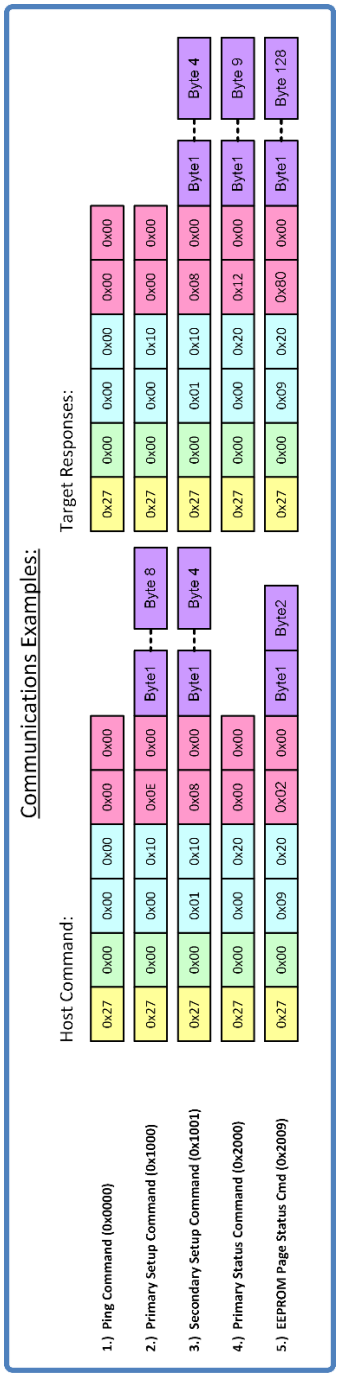

Figure 4-2 Message Transaction Examples – LS27 Protocol

4.3.1.1.1 Ping Command Messaging – 0x0000 Message ID

The "Ping" command is used to determine the health and presence of the communications channel between the host and the receiver. In response to the "Ping" command, the receiver will echo the received message header back to the host only if the responding device identifies as the device ID being requested. The message format appears in Figure 4-3.

Ping Command Content (Message ID = 0x0000)

Header Byte	D7	D6	D5	D4	D3	D2	D1	D0	Notes:
0	Device ID								0x00 or 0x27
1	Device Address								0x00
2	Command Op Code LSB								0x00
3	Command Op Code MSB								0x00
4	Bytes to Follow LSB								0x00
5	Bytes to Follow MSB								0x00
Body Byte	**D7**	**D6**	**D5**	**D4**	**D3**	**D2**	**D1**	**D0**	**Notes:**
(none)									

Ping Command Response

Header Byte	D7	D6	D5	D4	D3	D2	D1	D0	Notes:
0	Device ID								0x27
1	Device Address								0x00
2	Command Op Code LSB								0x00
3	Command Op Code MSB								0x00
4	Bytes to Follow LSB								0x00
5	Bytes to Follow MSB								0x00
Body Byte	**D7**	**D6**	**D5**	**D4**	**D3**	**D2**	**D1**	**D0**	Notes:
(none)									

Figure 4-3 Ping Message Construction 0x0000 – LS-27 Protocol

4.3.1.1.2 Primary Setup Command/Response Message – 0x1000 Message ID

The "Primary Setup" message provides fundamental control information to the receiver channel. The message header is followed by eight (8) data bytes as defined in Figure 4-4. Bit definitions are also defined below.

Setup Command Content (Message ID = 0x1000)

Header Byte	D7	D6	D5	D4	D3	D2	D1	D0	Notes:
0	Device ID								0x27
1	Device Address								0x00
2	Command Op Code LSB								0x00
3	Command Op Code MSB								0x10
4	Bytes to Follow LSB								0x08
5	Bytes to Follow MSB								0x00

Body Byte		D7	D6	D5	D4	D3	D2	D1	D0	Notes:
0	6	-	XDOUT	DAT POL	SETUP_NUMBER				DCx	
1	7	INTREF	-	-	-	-	-	-	-	
2	8	LIM	AGCZERO	BANDOFPREF		FRZ	AGCTC			
3	9	AFC*	IFBW			DEEMPHFIL	VFLT			
4	10	AMINV	-	-	AMFIL					
5	11	TUNE1 (Fc *mod* 1MHz / 10kHz)								
6	12	TUNE2 (Fc *mod* 256MHz / 1MHz)								
7	13	TUNE3 (Fc / 256MHz)								

* - AFC is only available on future versions of the LS27M version.

Setup Command Response

Header Byte	D7	D6	D5	D4	D3	D2	D1	D0	Notes:
0	Device ID								0x27
1	Device Address								0x00
2	Command Op Code LSB								0x00
3	Command Op Code MSB								0x10
4	Bytes to Follow LSB								0x00
5	Bytes to Follow MSB								0x00
Body Byte	**D7**	**D6**	**D5**	**D4**	**D3**	**D2**	**D1**	**D0**	Notes:
(none)									

Figure 4-4 Primary Setup Message Construction 0x1000 – LS-27 Protocol

Bit Definitions for the Primary Setup command are shown in Figure 4-5.

Command Mnemonic	Description/Definition	Logic State/Explanation
DCx	Radio Selection Number	0=Radio 1 or Down Converter 1, 1=Radio 2 or Down Converter 2
AFC	Automatic Frequency Control	0 =Disabled, 1 = Enabled *(Future LS27M Option)*
INTREF	Internal/External Reference Clock Selection	0=Select External Reference Clock, 1=Select Internal Reference Clock
XDOUT	External Discrete Output (for RF FE Switch)	1 = RF Input A, 0 = RF Input B
DAT POL	FM Demodulator Output Polarity	0=Normal Polarity, 1=Inverse Polarity. (FM Demod Option Required)
LIM	Hardware Limited Mode	0=LIM mode is off, 1=LIM mode is on.
AGCZERO	AGC Zero Mode	0=AGC Zero mode is off, 1=AGC Zero mode is on.
BANDOFPREF	Band Of Preference	Selects the band to start looking for the Center Frequency.
FRZ	AGC Freeze	0=Freeze DAGC Discrete Out Processing. 1=Enable DAGC Discrete Out Processing.
AGCTC	AGC Time Constant Selection	0=0.1 msec, 1=1 msec, 2=10 msec, 3=100 msec, 4=1 sec, 5=CustomTC1, 6=CustomTC2, 7=CustomTC3
IFBW	IFBW Filter Selection	0=Filter 1, 1=Filter 2, 2=Filter 3, 3=Filter 4, 4=Filter 5, 5=Filter 6, 6=Filter 7, 7=Filter 8
VFLT	Video Filter Selection	0=Filter 1, 1=Filter 2, 2=Filter 3, 3=Filter 4, 4=Filter 5, 5=Filter 6, 6=Filter 7, 7=Filter 8. (FM Demod Option Required)
DEEMPHFIL	DeEmphasis Filter Selection	0=DeEmphasis Disabled, 1= DeEmphasis Enabled. (FM Demod Option Required)
AMINV	AM Inverse	0=AM is normal, 1=AM is inverted.
AMFIL	AM Filter Selection	0=50, 1=100, 2=200, 3=300, 4=400, 5=500, 6=600, 7=700, 8=800, 9=900, 10=1000, 11=1100, 12=1200, 13=1300, 14=1400, 15=1500, 16=1600, 17=1700, 18=1800, 19=1900, 20=2000, 21=3000, 22=4000, 23=5000, 24=6000, 25=7000, 26=8000, 27=9000, 28=10000, 29=15000, 30=20000, 31=50000 Hertz.
TUNE1	Receiver Tune Center Frequency Wd 1	Wd1 Receiver Center Frequency (MHz) (Fc mod 1MHz)/10kHz
TUNE2	Receiver Tune Center Frequency Wd 2	Wd2 Receiver Center Frequency (MHz) (Fc mod 256MHz)/1MHz
TUNE3	Receiver Tune Center Frequency Wd 3	Wd3 Receiver Center Frequency (MHz) Fc/256MHz
SNUM	Setup Number	Save the current setup to one of 16 possible storage locations.

Figure 4-5 Primary Setup Message Construction Bit Definitions – LS-27 Protocol

4.3.1.1.3 Secondary Setup Command/Response Message – 0x1001 Message ID

The Secondary Setup command provides control information to the receiver channel commanded and requests that internal status from the controlled channel. The message header is followed by four (4) data bytes as defined in Figure 4-6. Mode command definitions are shown in Figure 4-7. Mode command response definitions are shown in Figure 4-8. For special Mode Command "Get Setup Info", responses are shown in Figure 4-9.

Mode Command Content (Message ID = 0x1001)

Header Byte	D7	D6	D5	D4	D3	D2	D1	D0	Notes:
0	Device ID								0x27
1	Device Address								0x00
2	Command Op Code LSB								0x01
3	Command Op Code MSB								0x10
4	Bytes to Follow LSB								0x04
5	Bytes to Follow MSB								0x00
Body Byte	**D7**	**D6**	**D5**	**D4**	**D3**	**D2**	**D1**	**D0**	**Notes:**
0 / 6	MODE					-	-	DCx	
1 / 7	CMD1								
2 / 8	CMD2								
3 / 9	CMD3								

Mode Command Response

Header Byte	D7	D6	D5	D4	D3	D2	D1	D0	Notes:
0	Device ID								0x27
1	Device Address								0x00
2	Command Op Code LSB								0x01
3	Command Op Code MSB								0x10
4	Bytes to Follow LSB								0x04
5	Bytes to Follow MSB								0x00
Body Byte	**D7**	**D6**	**D5**	**D4**	**D3**	**D2**	**D1**	**D0**	**Notes:**
0 / 6	MODE					-	-	DCx	
1 / 7	STAT1								
2 / 8	STAT2								
3 / 9	STAT3								

Figure 4-6 Secondary Setup Message Construction 0x1001 – LS-27 Protocol

Mode	Definition	CMD1	CMD2	CMD3
0x02	EEPROM Mode	EEPROM Sub Mode: 000pppppb = PROM Page No. 01aaaaaab = RD Offset Pg Address (LSB is returned on STAT2, MSB is returned on STAT3).	(Unused) (Unused)	(Unused) (Unused)
0x03	Tune Mode	Fc Mod 1MHz/10Khz	Fc MOD 256MHz/1MHz	Fc/256MHz
0x04	DAGC Control Mode	0x00 = LINEAR 0x01 = LIMITED 0x02 = (Reserved) 0x03 = (Reserved)	(Unused)	(Unused)
0x06	Read AM LPF Table	(Unused)	Table Index (0 to 31)	(Unused)
0x07	Read AM Freq Value	(Unused)	(Unused)	(Unused)
0x09	Read SW2 Mode Cmd	0x00=Read, 0x80=Write	If Write, 0x40=Prefer To Use EEPROM	If Write, GPSTAT1 (SW2) Values
0x0A	Program Custom Time Constants	Custom Time Constant Number (Values between 1 and 3)	8 LSBs of 100uSec TConstant Multiple	8 MSBs of 100uSec TConstant Multiple
0x0B	Select DAGC Out Range	(Unused)	0x00 = -4V to 0V, 0x08 = 0V to -4V, 0x01 = -2V to 0V, 0x09 = 0V to -2V, 0x02 = 0V to +2V, 0x0A = 2V to 0V, 0x03 = 0V to +4V, 0x0B = 4V to 0V, 0x04 = -2V to +2V, 0x0C = 2V to -2V, 0x05 = -4V to +4V, 0x0D = 4V to -4V, All others undefined.	(Unused)
0x0C	Implementation A Override (for development use only)	| 5 4 3 2 1 0| 5 4 3 2 1 0| 5 4 3 2 1 0| 5 4 3 2 1 0| | VGA2 | ATTN2 | VGA1 | ATTN1 | |23 22 21 20 19 18|17 16|15 14 13 12|11 10 09 08|07 06|05 04 03 02 01 00| | CMD3 | CMD2 | CMD1 | | 7 6 5 4 3 2 1 0| 7 6 5 4 3 2 1 0| 7 6 5 4 3 2 1 0|		
0x0D	Program Digipot Mode	Digipot Instruction: 0x01 = Decrement Digipot 0x02 = Increment Digipot 0x03 = Set Digipot to Preset Value 0x04 = Query Digipot Setting 0x05 = Set Digipot to Default Value	Digipot Preset Value: 0-99	Digipot Select: 0x00 = AM Gain
0x0E	Programmable AGC Out dBm Range	Lower dBm value in 2's complement format. Valid range is from -110 to 10. Granularity is 1 dBm.	Upper dBm value in 2's complement format. Valid range is from -110 to 10. Granularity is 1 dBm.	(Unused)
0x0F	Programmable AGC Out Voltage Range	Starting voltage value * 10 in 2's complement format. Valid range is from 40 (4.0 V) to -40 (-4.0 V). Granularity is 0.1 V.	Ending voltage value * 10 in 2's complement format. Valid range is from 40 (4.0 V) to -40 (-4.0 V). Granularity is 0.1 V.	(Unused)
0x10	DAC Adjust Mode	DAC Selection: 0x01 = Video Output Adjust	8 LSBs of DAC Setting	6 MSBs of DAC Setting
0x12	Get Setup Info Mode	0x00 = Get DCxCTRL124 Submode. 0x01 = Get Tune Freq Submode. 0x02 = Get DAGC Values Submode. 0x03 = Get AGC Out dBm Range. 0x04 = Get AGC Out Voltage Range. 0x05 = Get Miscellaneous Values.	(Unused)	(Unused)
0x14	External Values Mode	External Values Submode: 0x00 = RSSI Correction Submode. 0x01 = Compression Point Submode.	RSSI Correction MSB Compression Point MSB	RSSI Correction LSB Compression Point MSB
0x17	Host RSSI Averaging Mode	0=No Averaging, 1=Filtered Averaging	0=Write CMD1 Value, 1=Read Only	(Unused)
0x18	Front End Attenuator Control Mode	| 7 | 6 |5|4|3|2|1|0| DC1: |Wrt|Fra|Atten Value|	| 7 | 6 |5|4|3|2|1|0| DC2: |Wrt|Fra|Atten Value|	DC1&|7|6|5|4|3|2| 1 | 0 | DC2: | |Wrt|On At Boot|
0x19	Rd Stored Environment Values	0 = Max Temp °C, 1 = Min Temp °C 2 = Max Voltage, 3 = Min Voltage 4 = Max Amperage, 5 = Min Amperage, 6 = Current Temp °C, 7 = Current Voltage, 8 = Current Amperage	(Unused)	(Unused)
0x1F	Serial Channel Control Mode	0x00 = Serial Baudrate Select Submode.	8 LSBits of (BAUD Rate/100).	3 MSBits of (BAUD Rate/100).

Figure 4-7 Secondary Setup Message Mode Command Definitions – LS-27 Protocol

Mode	Functional_Mode	STAT1	STAT2	STAT3
0x02	EEPROM Mode: Read	Page_Offset	8 LSBs of EEPROM Read Value	8 MSBs of EEPROM Read Value
0x02	EEPROM Mode: Pg Set	Page Number	(Unused = 0)	(Unused = 0)
0x03	Tune Mode	Fc Mod 1MHz/10Khz	Fc MOD 256MHz/1MHz	Fc/256MHz
0x04	DAGC Control Mode	DAGC Control Mode Commanded	(Unused = 0)	(Unused = 0)
0x06	Read AM LPF Table	Index Value	8 LSBs of AM LPF Fc Frequency	8 MSBs of AM LPF Fc Frequency
0x07	Read AM Freq Counter	8 LSBs of AM Counter Frequency	8 Mid-SBs of AM Counter Frequency	1 MSB of AM Counter_Frequency
0x09	Read SW2	BIT7=0, Device is LS27B BIT7=1, Device is LS27P3 BIT6=1, No Physical Switch exists BIT5=1, Prefer to use EEPROM instead of Physical Switch	LS27B: SW2 Values_(0x00 to 0xFF) LS27P3: SW2 Values_(0x00 to 0x0F)	LS27B: Ext. Disc. Lines (0x00-0x1F) LS27P3: Unused, 0x00
0x0A	Program Custom Time Constants	Custom Time Constant Number (Values between 1 and 3)	8 LSBs of 100 usec Tconstant Multiple	8 MSBs of 100 usec Tconstant Multiple
0x0B	Select DAGC Output Range	(Unused = 0)	0x00 = -4V to 0V,_ 0x08 = 0V to -4V, 0x01 = -2V to 0V,_ 0x09 = 0V to -2V, 0x02 = 0V to +2V,_0x0A = 2V to 0V, 0x03 = 0V to +4V,_0x0B = 4V to 0V, 0x04 = -2V to +2V,_0x0C = 2V to -2V, 0x05 = -4V to +4V,_0x0D = 4V to -4V, All others undefined.	(Unused = 0)
0x0D	Program Digipot Mode		Current Digipot Setting (0 – 99)	
0x0E	Programmable AGC Out dBm Range	Lower dBm value in 2's complement format.	Upper dBm value in 2's complement format.	(Unused = 0)
0x0F	Programmable AGC Out Voltage Range	Starting voltage value * 10 in 2's complement value.	Ending voltage value * 10 in 2's complement format.	(Unused = 0)
0x10	DAC Adjust Mode	DAC Selection Value	8 LSBs of the DAC Setting	6 MSBs of the DAC Setting
0x12	Get Setup Info Submodes: 0x00=Get DCxCTRL124 Submode. 0x01=Get Tune Freq Submode. 0x02=Get DAGC Values Submode. 0x03=Get AGC Out dBm Range. 0x04=Get AGC Out Voltage Range. 0x05=Get Miscellaneous Values. 0x06=Get External RSSI Correction 0x07=Get External Compression Pt.	| 7 | 6 |5|4| 3 |2|1| 0 | |LIM|AGCZERO|-|-|FRZ|-|-| - | Fc Mod 1MHz/10Khz AGC Time Constant value in 100 usec LSB Lower dBm value in 2's comp format Start voltage value * 10 in 2's comp |POL|AGCTC Index|_ VFIL_ |CAL| External RSSI Correction MSB External Compression Point MSB	|7|6|5|4|_3_ |2| 1 | 0 | |-| IFBW|DEEMP|-|BANDOFPREF| Fc MOD 256MHz/1MHz AGC Time Constant value in 100 usec MSB Upper dBm value in 2's comp format End voltage * 10 in 2's comp format Number of RSSI Samples MSB External RSSI Correction LSB External Compression Point LSB	|_7_ |6|5|4|3|2|1|0| |AMINV|-|-|_ AMFLT_ | Fc/256MHz DAGC Control Mode (Unused = 0) (Unused = 0) Number of RSSI Samples LSB (Unused = 0) (Unused = 0)
0x17	Host RSSI Averaging	0=No Averaging, 1=Filtered Averaging	(Unused = 0)	(Unused = 0)
0x18	Front End Attenuator Control Mode	|7| 6 |5|4|3|2|1|0| DC1:| |Frz|Atten Value|	|7| 6 |5|4|3|2|1|0| DC2:| |Frz|Atten Value|	DC1&|7|6|5|4|3|2|1| 0 | DC2:| |On At Boot|
0x19	Rd Stored Environment Values	0 = Max Temp °C, 1 = Min Temp °C, 2 = Max Voltage, 3 = Min Voltage, 4 = Max Amperage, 5 = Min Amperage, 6 = Current Temp °C, 7 = Current Voltage, 8 = Current Amperage.	8 LSBs of Temp Value (Signed Int16) 8 LSBs of Voltage 8 LSBs of Current	8 MSBs of Temp Value (Signed Int16) 8 MSBs of Voltage 8 MSBs of Current
0x1F	Serial Channel Control Mode	(Unused = 0)	(Unused = 0)	(Unused = 0)

Figure 4-8 Secondary Setup Message Mode Command Responses – LS-27 Protocol

Get Setup Info Mode Table:

Get DCxCTRL124 Values		7	6	5	4	3	2	1	0
Submode= 0x00	STAT1	LIM	AGCZERO	-		FRZ	-		
	STAT2	-	IFBW Filter Index			DEEMP	-	Band of Preference	
	STAT3	AM Inverse	-		AM Filter Index				

Get Tune Frequency		7	6	5	4	3	2	1	0
Submode= 0x01	STAT1	Fc MOD 1MHz/10Khz							
	STAT2	Fc MOD 256MHz/1MHz							
	STAT3	Fc / 256MHz							

Get DAGC Values		7	6	5	4	3	2	1	0
Submode= 0x02	STAT1	AGC Time Constant Value in 100 µsecs LSB							
	STAT2	AGC Time Constant Value in 100 µsecs MSB							
	STAT3	-				Host RSSI Averaging		DAGC Control Mode	

Get AGC Out dBm Range		7	6	5	4	3	2	1	0
Submode= 0x03	STAT1	Lower dBm Value							
	STAT2	Upper dBm Value							
	STAT3	DAGC Output Range							

Get AGC Out Voltage Range		7	6	5	4	3	2	1	0
Submode= 0x04	STAT1	Lower Voltage Value (x10)							
	STAT2	Upper Voltage Value (x10)							
	STAT3	DAGC Output Range							

Get Miscellaneous Values		7	6	5	4	3	2	1	0
Submode= 0x05	STAT1	FM Demod Priority	AGC Time Constant Index			Video Filter Index			DAGC Cal Mode
	STAT2	-							
	STAT3	-							

Get External RSSI Correction		7	6	5	4	3	2	1	0
Submode= 0x06	STAT1	External RSSI Correction MSB							
	STAT2	External RSSI Correction LSB							
	STAT3	-							

Get Ext. Compression Point		7	6	5	4	3	2	1	0
Submode= 0x07	STAT1	External Compression Point MSB							
	STAT2	External Compression Point LSB							
	STAT3	-							

Figure 4-9 Secondary Setup Message Mode Command Get Setup Info Responses – LS-27 Protocol

4.3.1.1.4 Downconverter Setup Command/Response Message – 0x1100 Message ID

The Downconverter Setup command provides primary control information to the receiver channel commanded. This "extended" firmware command provides all the commanding offered by the 0x1000 command with some expansions of controls added to the LS-27-M second generation of the LS-27 product line. Many of these controls do not apply to the LS-27-B hardware platform. This command can be used in place of the 0x1000 command. The message structure is shown in Figure 4-10. Content definitions for the 0x1100 command are provided in Figure 4-11.

Down Converter Setup Command Content (Message ID = 0x1100)

Header Byte	D7	D6	D5	D4	D3	D2	D1	D0	Notes:
0	Device ID								0x27
1	Device Address								0x00
2	Command Op Code LSB								0x00
3	Command Op Code MSB								0x11
4	Bytes to Follow LSB								0x2C
5	Bytes to Follow MSB								0x00

Body Byte		D7	D6	D5	D4	D3	D2	D1	D0	Notes:
0	6								DCx	
1	7									
2	8					Band				
3	9	Tuning Frequency <39:32>								
4	10	Tuning Frequency <31:24>								
5	11	Tuning Frequency <23:16>								
6	12	Tuning Frequency <15:8>								
7	13	Tuning Frequency <7:0>								
8	14	Auto Mode				IF Filter Selection				
9	15					Video Filter Selection				
10	16						FM Polarity	DeEmphasis		
11	17	AM Inverse		AM Filter Selection						
12	18	DAGC Control Mode		HW Limited	AGC Zero	AGC Freeze	AGC Time Constant Selection			
13	19									
14	20					AM FW TC En	AM HW TC En	AM Out Impdnc	AFC	
15	21							AM Bias <9:8>		10-bit unsigned integer
16	22	AM Bias <7:0>								
17	23	AM Gain Ovrrid						AM Gain Override Val <9:8>		10-bit unsigned integer
18	24	AM Gain Override Value <7:0>								
19	25							AM FW TC # of Samples <9:8>		22.3 µseconds per sample
20	26	AM Firmware Time Constant Number of Samples <7:0>								
21-43	27-49									

Down Converter Setup Command Response

Header Byte	D7	D6	D5	D4	D3	D2	D1	D0	Notes:
0	Device ID								0x27
1	Device Address								0x00
2	Command Op Code LSB								0x00
3	Command Op Code MSB								0x11
4	Bytes to Follow LSB								0x18
5	Bytes to Follow MSB								0x00

Body Byte		D7	D6	D5	D4	D3	D2	D1	D0	Notes:
0	6	Returned Video Filter Index				Band				
1	7									
2-24	8-30									

Figure 4-10 Downconverter Setup Message Construction 0x1100 – LS-27 Protocol

Command Mnemonic	Description/Definition	Logic State/Explanation
DCx	Radio Selection Number	0=Radio 1 or Down Converter 1, 1=Radio 2 or Down Converter 2
Band	Band of Preference Selection	0-9 Band Number; Selects RF Band Filter; Used primarily for overlapping band frequencies
Tuning Frequency	RF Channel Tune Frequency	Frequency value in (Hz)
Auto Mode	Automatic Video Filter Selection Mode	0 = Disabled, 1 = Enabled; Selects the appropriate video filter for PCM data based on IF filter selection
IF Filter Selection	IF Filter Bandwidth Selection	0-7 Filter Bandwidth Selection;
Video Filter Selection	FM Video Filter Bandwidth Selection	0-14 Filter Bandwidth Selection; Low-Pass FM Video Filters
Deemphasis	FM Video Deemphasis Filter Select	0 = Bypass, 1 = NTSC, 2 = PAL, 3 = Analog PCM
FM Polarity	FM Video Polarity Select	0 = Normal, 1 = Inverted
HW Limited	Hardware Limited Selection	0=Use DAGC Control Mode, 1=Use Hardware Limited Mode
AM Out TC En	AM Output Time Constant Enable	0=AM Output Time Constant is disabled, 1=AM Output Time Constant is enabled
AM Out Impdnc	AM Output Impedance Selection	0=Use 50 Ω Impedance value, 1=Use 75 Ω Impedance value
AM Filter Selection	AM Output Low-pass filter Selection	0-31; 0 selects narrowest bandwidth, 31 selects the widest bandwidth
AM Inverse	AM Output Polarity	0 = Normal, 1 = Inverted
AGC Time Constant	AGC Time Constant Select	0-7;
AGC Freeze	AGC Output Gain Freeze	0 = Disabled, 1= Enabled
AGC Zero	AGC Output Gain Zero	0 = Disabled, 1 = Enabled
HW Limited	Hardware Limited/DAGC Mode Select	0 = Hardware Limited Mode Enabled, 1 = DAGC Mode Enabled
DAGC Control Mode	DAGC Control Mode Selection	0 = Linear DAGC Mode, 1-3 Unsupported (Future)
AFC	Automatic Frequency Control Select	0 = Disabled, 1 = Enabled (Future)
AM Out Impdnc	AM Output Impedance Select	0 = 50 ohms, 1 = 75 ohms
AM HW TC En	AM Hardware Time Constant Select	0 = disabled, 1 = enabled
AM FW TC En	AM Firmware Time Constant Select	0 = disabled, 1 = enabled
AM Bias	AM Output Voltage Offset Bias	0-1023 = AM Output-2.5 to AM Output +2.5 Bias
AM Gain Ovrrid	AM Output Gain Override	0 = Use AM Calibrated value; 1 = Use AM Gain Override Value
AM GainOverride Val	AM Gain Control Override Value	0-1023; 0 = minimum output gain, 1023 = maximum output gain
AM FW TC Samples	AM Firmware Time Constant Sample	Number of 22.3usecond samples in the integrate and dump

Figure 4-11 Downconverter Setup Message Construction 0x1100 Bit Definitions– LS-27 Protocol

4.3.1.1.5 Downconverter Auxiliary Setup Command/Response Message – 0x1101 Message ID

The Downconverter Auxiliary Setup command provides control information to the receiver channel commanded. This is a second-generation firmware command and provides additional commanding to the primary 0x1100 setup command and many of the same commands offered by the 0x1001 command of the LS-27-B command set. This command, in conjunction with the 0x1100 command, provide most critical commanding of the LS-27-M platform. Many of the functions of this command do not apply to the original LS-27-B generation of hardware. The message structure is shown in Figure 4-12. Content definition of the command is provided in Figure 4-11.

Down Converter Auxiliary Setup Command Content (Message ID = 0x1101)

Header Byte		D7	D6	D5	D4	D3	D2	D1	D0	Notes:
0		Device ID								0x27
1		Device Address								0x00
2		Command Op Code LSB								0x01
3		Command Op Code MSB								0x11
4		Bytes to Follow LSB								0x12
5		Bytes to Follow MSB								0x00
Body Byte		**D7**	**D6**	**D5**	**D4**	**D3**	**D2**	**D1**	**D0**	**Notes:**
0	6	Host Averaging							DCx	
1	7	AGC Out dBm Range Lower Value								10 to -110 dBm
2	8	AGC Out dBm Range Upper Value								
3	9	AGC Out Voltage Range Start Value								40 to -40 tenths of Volts
4	10	AGC Out Voltage Range End Value								
5	11	IF Output Gain								
6	12	Video Gain Adjustment <13:8>								14-bit unsigned integer
7	13	Video Gain Adjustment <7:0>								
8-17	14-23									

Down Converter Auxiliary Setup Command Response

Header Byte	D7	D6	D5	D4	D3	D2	D1	D0	Notes:
0	Device ID								0x27
1	Device Address								0x00
2	Command Op Code LSB								0x01
3	Command Op Code MSB								0x11
4	Bytes to Follow LSB								0x00
5	Bytes to Follow MSB								0x00
Body Byte	**D7**	**D6**	**D5**	**D4**	**D3**	**D2**	**D1**	**D0**	**Notes:**
(none)									

Figure 4-12 Downconverter Auxiliary Setup Message Construction 0x1101 – LS-27 Protocol

Command Mnemonic	Description/Definition	Logic State/Explanation
DCx	Radio Selection Number	0=Radio 1 or Down Converter 1, 1=Radio 2 or Down Converter 2
Host Averaging	Host Averaging Select	0 = Disabled, 1 = Enabled; 1st Order Polynomial applied to the RSSI Host Returned values only
AGC Out dBm Rng Low	AGC Output Lower dBm Range	10 to -110dBm range; Lower voltage trigger point (signed 8-bit integer value of dBm)
AGC Out dBm Rng Upper	AGC Output Upper dBm Range	10 to -110dBm range; Upper voltage trigger point (signed 8-bit integer value of dBm)
AGC Out Volt Rng Start	AGC Output Voltage Range Start	-50 to 50 in 0.1 volt increments; Lower dBm voltage output (signed 8-bit integer value x10)
AGC Out Volt Rng End	AGC Output Voltage Range End	-50 to 50 in 0.1 volt increments; Upper dBm voltage output (signed 8-bit integer value x10)
IF Output Gain	IF Output Gain Adjustment	0-63; 0 = minimum output level, 63 maximum output level
Video Gain Adjustment	Video Output Gain Adjustment	0-16383; 0 = minimum video output gain, 16383 = maximum video output gain

Figure 4-13 Downconverter Auxiliary Setup Message Content Definitions 0x1101 – LS-27 Protocol

4.3.1.1.6 General Status Command/Response Message – 0x2000 Message ID

The General Status command provides receiver operational status such as signal strength, deviation amounts, AM index values, and certain lock states. The message definition is shown in Figure 4-14. Bit definitions for the command are shown in Figure 4-15.

General Status Command Content (Message ID = 0x2000)

Header Byte	D7	D6	D5	D4	D3	D2	D1	D0	Notes:
0	Device ID								0x27
1	Device Address								0x00
2	Command Op Code LSB								0x00
3	Command Op Code MSB								0x20
4	Bytes to Follow LSB								0x00
5	Bytes to Follow MSB								0x00
Body Byte	**D7**	**D6**	**D5**	**D4**	**D3**	**D2**	**D1**	**D0**	**Notes:**
(none)									

General Status Command Response

Header Byte		D7	D6	D5	D4	D3	D2	D1	D0	Notes:
0		Device ID								0x27
1		Device Address								0x00
2		Command Op Code LSB								0x00
3		Command Op Code MSB								0x20
4		Bytes to Follow LSB								0x09
5		Bytes to Follow MSB								0x00
Body Byte		**D7**	**D6**	**D5**	**D4**	**D3**	**D2**	**D1**	**D0**	**Notes:**
0	6	REFSTATE	PLLSYNC	-	-	-	-	-	-	
1	7	DC1RSSILO								
2	8	DC1COMPWARN	DC1ZEROSTAT	DC1LO2STAT	DC1LO1STAT	DC1RSSIHI				
3	9	DC1XDIN	DC1AMINDX							
4	10	-	DC1FMDEV							
5	11	DC2RSSILO								
6	12	DC2COMPWARN	DC2ZEROSTAT	DC2LO2STAT	DC2LO1STAT	DC2RSSIHI				
7	13	DC2XDIN	DC2AMINDX							
8	14	-	DC2FMDEV							

Figure 4-14 General Status Message Construction 0x2000 – LS-27 Protocol

Response Mnemonic	Description/Definition	Logic State/Explanation
REFSTATE	Present state of the Internal/External Reference Select	1 = Internal Reference Selected, 0 = External Reference Selected
PLLSYNC	Internal Synthesizer Reference Synchronization Status	1 = PLL Synchronized, 0 = PLL Unsynchronized
DCxRSSILO	DCx Received Signal Strength (8 LSBs)	Lower 8 bits of RSSI level
DCxRSSIHI	DCx Received Signal Strength (4 MSBs)	Upper 4 bits of RSSI level
DCxCOMPWARN	DCx Compression Warning	0 = Not in compression, 1 = May be in compression.
DCxAMINDX	DCx Measured AM Index	AM Index Measurement (Range 0-127)
DCxLO1STAT	DCx LO1 Status	1 = Locked, 0 = Unlocked
DcxLO2STAT	DCx LO2 Status	1 = Locked, 0 = Unlocked
DCxXDIN	DCx External Discrete Input (PIN4)	1 = Logic High State, 0 = Logic Low State
DCxFMDEV	DCx FM Deviation in Percent	Valid range is from 0% – 127%.
DCxZEROSTAT	DCx AGC Zero State	1=In AGC Zero Mode, 0=Not in AGC Zero Mode.

Figure 4-15 General Status Message Bit Definitions– LS-27 Protocol

4.3.1.1.7 System Value Status Command/Response Message – 0x2002 Message ID

The System Value Status command returns to the user the state of various device operating parameters and environment variables. The message structure is shown in Figure 4-17.

System Values Status Command Content (Message ID = 0x2002)

Header Byte	D7	D6	D5	D4	D3	D2	D1	D0	Notes:
0	Device ID								0x27
1	Device Address								0x00
2	Command Op Code LSB								0x02
3	Command Op Code MSB								0x20
4	Bytes to Follow LSB								0x00
5	Bytes to Follow MSB								0x00
Body Byte	**D7**	**D6**	**D5**	**D4**	**D3**	**D2**	**D1**	**D0**	**Notes:**
(none)									

System Values Status Command Response

Header Byte		D7	D6	D5	D4	D3	D2	D1	D0	Notes:
0		Device ID								0x27
1		Device Address								0x00
2		Command Op Code LSB								0x02
3		Command Op Code MSB								0x20
4		Bytes to Follow LSB								0x10
5		Bytes to Follow MSB								0x00
Body Byte		**D7**	**D6**	**D5**	**D4**	**D3**	**D2**	**D1**	**D0**	**Notes:**
0	6	Digital 3.3 Volt Rail								10ths of Volts
1	7	Digital 5.0 Volt Rail								10ths of Volts
2	8	DC1 Analog +5.5 Volt Rail								10ths of Volts
3	9	DC2 Analog +5.5 Volt Rail								10ths of Volts
4	10	DC1 Analog +5.0 Volt Rail								10hs of Volts
5	11	DC2 Analog +5.0 Volt Rail								10hs of Volts
6	12	DC1 Analog -5.0 Volt Rail								10hs of Volts
7	13	DC2 Analog -5.0 Volt Rail								10ths of Volts
8	14	System Temperature								Degrees Celsius
9	15	Supply Voltage <15:8>								10ths of Volts
10	16	Supply Voltage <7:0>								
11	17	Supply Amperage								10ths of Amps
12	18									
13	19									
14	20									
15	21									

Figure 4-16 System Values Status Command 0x2002 – LS-27 Protocol

4.3.1.1.8 EEPROM Page Read Command/Response Message – 0x2009 Message ID

The primary receiver configuration information, used to drive software GUIs and controls, is found in the first page (indexed from 0) of the receivers primary internal EEPROM. Information contained in this EEPROM includes the bandwidths installed in the receiver, associated IF and video filter bandwidths, along with various other configuration information. This information can be accessed via an EEPROM read mode command. The EEPROM Page read Message structure is shown in Figure 4-17. Bit definitions for the message are shown in Figure 4-18. An example of the EEPROM contents is shown in Figure 4-19.

EEPROM Page Status Command Content (Message ID = 0x2009)

Header Byte	D7	D6	D5	D4	D3	D2	D1	D0	Notes:
0	Device ID								0x27
1	Device Address								0x00
2	Command Op Code LSB								0x09
3	Command Op Code MSB								0x20
4	Bytes to Follow LSB								0x02
5	Bytes to Follow MSB								0x00
Body Byte	**D7**	**D6**	**D5**	**D4**	**D3**	**D2**	**D1**	**D0**	**Notes:**
0 6	-	-	-	-	-	-	-	DCx	
1 7	-	-	-	PAGE					

EEPROM Page Status Command Response

Header Byte	D7	D6	D5	D4	D3	D2	D1	D0	Notes:
0	Device ID								0x27
1	Device Address								0x00
2	Command Op Code LSB								0x09
3	Command Op Code MSB								0x20
4	Bytes to Follow LSB								0x80
5	Bytes to Follow MSB								0x00
Body Byte	**D7**	**D6**	**D5**	**D4**	**D3**	**D2**	**D1**	**D0**	**Notes:**
0 6	LOC0_LSB								
1 7	LOC0_MSB								
2-125 8-131	...								
126 132	LOC63_LSB								
127 133	LOC63_MSB								

Figure 4-17 EEPROM Page Read Message Construction 0x2009– LS-27 Protocol

Command Mnemonic	Description/Definition	Logic State/Explanation
DCx	Radio Selection Number	0=Radio 1 or Down Converter 1, 1=Radio 2 or Down Converter 2
PAGE	EEPROM Page Number Selection	0 – 31 are valid page numbers.

Figure 4-18 EEPROM Page Read Message Bit Definitions – LS-27 Protocol

LS27M1 Configuration EEPROM Map – Pg Address 0

EEPROM Address Offset (Hex)	EEPROM Address Offset (Dec)	Register Contents	LS27M1 Downconverter #1 (Decimal [*])	LS27BM1 Downconverter #2 (Decimal [*])
0x00	0	IFBW0 (kHz):	250[*]	250[*]
0x01	1	IFBW1 (kHz):	500[*]	500[*]
0x02	2	IFBW2 (kHz):	1000[*]	1000[*]
0x03	3	IFBW3 (kHz):	2000[*]	2000[*]
0x04	4	IFBW4 (kHz):	5000[*]	5000 [*]
0x05	5	IFBW5 (kHz):	10000[*]	10000[*]
0x06	6	IFBW6 (kHz):	20000[*]	20000[*]
0x07	7	IFBW7 (kHz):	40000[*]	40000[*]
0x08	8	MSB: Averaging Function enumeration value, LSB:# of LOG samples taken in the RSSI Calc.	0x0003	0x0003
0x09	9	DAGC Limited Mode Target in dBm.	0	0
0x0A	10	AGC Time Constant 0 (100 µSec Updates):	1 (0.1msec)	1 (0.1msec)
0x0B	11	AGC Time Constant 1 (100 µSec Updates):	10 (1msec)	10 (1msec)
0x0C	12	AGC Time Constant 2 (100 µSec Updates):	100 (10msec)	100 (10msec)
0x0D	13	AGC Time Constant 3 (100 µSec Updates):	1000 (100msec)	1000 (100msec)
0x0E	14	AGC Time Constant 4 (100 µSec Updates):	10000 (1sec)	10000 (1sec)
0x0F	15	AGC Custom Time Constant 1	50 [*] (5msec)	50 [*] (5msec)
0x10	16	AGC Custom Time Constant 2	500 [*] (50msec)	500 [*] (50msec)
0x11	17	AGC Custom Time Constant 3	5000 [*] (500msec)	5000 [*] (500msec)
0x12	18	FE Attenuator Hysterious in ½ dBm Steps	4	4
0x13	19	Band 0 Start Freq (MHz):	2200 [*]	2200 [*]
0x14	20	Band 0 Stop Freq (MHz):	2400[*]	2400[*]
0x15	21	Band 1 Start Freq (MHz):	1710[*]	1710[*]
0x16	22	Band 1 Stop Freq (MHz):	1850[*]	1850[*]
0x17	23	Band 2 Start Freq (MHz):	1435[*]	1435[*]
0x18	24	Band 2 Stop Freq (MHz):	1540[*]	1540[*]
0x19	25	Band 3 Start Freq (MHz):	70[*]	70[*]
0x1A	26	Band 3 Stop Freq (MHz):	70[*]	70[*]
0x1B	27	Tuning Step: Band1 (LSByte = Step x 5kHz) Band2 (LSByte = Step x 5kHz)	0x0A0A	0x0A0A
0x1C	28	Tuning Step: Band3 (LSByte = Step x 5kHz) Band4 (LSByte = Step x 5kHz)	0x0A00	0x0A00
0x1D	29	Band 0 RSSI M Scale: (x10000)	293	293
0x1E	30	Band 0 RSSI B Scale: (x10)	-1100	-1100
0x1F	31	Band 1 RSSI M Scale: (x10000)	293	293
0x20	32	Band 1 RSSI B Scale: (x10)	-1100	-1100
0x21	33	Band 2 RSSI M Scale: (x10000)	293	293
0x22	34	Band 2 RSSI B Scale: (x10)	-1100	-1100
0x23	35	Band 3 RSSI M Scale: (x10000)	293	293
0x24	36	Band 3 RSSI B Scale: (x10)	-1100	-1100
0x25	37	Video Filter 0 BW (kHz)	125[*]	125[*]
0x26	38	Video Filter 1 BW (kHz)	250[*]	250[*]
0x27	39	Video Filter 2 BW (kHz)	500[*]	500[*]
0x28	40	Video Filter 3 BW (kHz)	1000[*]	1000[*]
0x29	41	Video Filter 4 BW (kHz)	2500[*]	2500[*]
0x2A	42	Video Filter 5 BW (kHz)	4200[*]	4200[*]
0x2B	43	Video Filter 6 BW (kHz)	10000[*]	10000[*]
0x2C	44	Video Filter 7 BW (kHz)	15000[*]	15000[*]
0x2D	45	Serial Channel BAUD (Rate/100)	576[*]	576[*]
0x2E	46	Serial Channel Format (#bits, pe, parity, #stop bits)	0x0080	Select SCIA Comm Type
0x2F	47	DeEmphasis Filter value in number of lines	525	525
0x30	48	FPGA Firmware Version / Invert PLL Lock Indication	0	*Unused/Spare*
0x31	49	DSP Firmware Version ID MSW:	0x0209	*Unused/Spare*
0x32	50	DSP Firmware Version ID LSW:	0x2009	*Unused/Spare*
0x33	51	RF/IF Hardware Port Configuration	0x0015	0x0015
0x34	52	Board Serial Number MSW	0x2700	(Highest Record Temp)
0x35	53	Board Serial Number LSW	0x0001	(Lowest Record Temp)
0x36	54	External Reference Input Frequency Setting (MHz)	10	(GPSTAT1 Replacement)
0x37	55	RF Input Switch Available	0	0
0x38	56	Board ID ASCII Character 0:	'L' (76)	(Highest Record Voltage)
0x39	57	Board ID ASCII Character 1:	'S' (83)	(Lowest Record Voltage)
0x3A	58	Board ID ASCII Character 2:	'2' (50)	(Highest Record Current)
0x3B	59	Board ID ASCII Character 3:	'7' (57)	(Lowest Record Current)
0x3C	60	Board ID ASCII Character 4:	'M' (77)	*Unused/Spare*
0x3D	61	Board ID ASCII Character 5:	'1' (49)	*Unused/Spare*
0x3E	62	Board ID ASCII Character 6:	0 *(ASCII null)*	*Unused/Spare*
0x3F	63	Board ID ASCII Character 7:	0 *(ASCII null)*	*Unused/Spare*

[*] = Values may be different based on User configurations

Figure 4-19 EEPROM Page Read of Primary Page 0

4.3.1.1.9 Current Downconverter Setup Command/Response Message – 0x4100 Message ID

The Current Downconverter Setup command provides the user software with the present setup state of the receiver. This command reflects the present set of setup information sent by the 0x1100 and/or 0x1000 commands. This is a second-generation firmware command. Many of these status fields do not apply to the LS-27-B hardware platform. The message structure is shown in Figure 4-20. Content definitions for the 0x4100 command are provided in Figure 4-11.

Down Converter Current Setup Command Content (Message ID = 0x4100)

Header Byte	D7	D6	D5	D4	D3	D2	D1	D0	Notes:
0	Device ID								0x27
1	Device Address								0x00
2	Command Op Code LSB								0x00
3	Command Op Code MSB								0x41
4	Bytes to Follow LSB								0x01
5	Bytes to Follow MSB								0x00

Body Byte		D7	D6	D5	D4	D3	D2	D1	D0	Notes:
0	6								DCx	

Down Converter Current Setup Command Response

Header Byte	D7	D6	D5	D4	D3	D2	D1	D0	Notes:
0	Device ID								0x27
1	Device Address								0x00
2	Command Op Code LSB								0x00
3	Command Op Code MSB								0x41
4	Bytes to Follow LSB								0x2C
5	Bytes to Follow MSB								0x00

Body Byte		D7	D6	D5	D4	D3	D2	D1	D0	Notes:
0	6								DCx	
1	7									
2	8					Band				
3	9	Tuning Frequency <39:32>								
4	10	Tuning Frequency <31:24>								
5	11	Tuning Frequency <23:16>								
6	12	Tuning Frequency <15:8>								
7	13	Tuning Frequency <7:0>								
8	14	Auto Mode				IF Filter Selection				
9	15					Video Filter Selection				
10	16						FM Polarity	DeEmphasis		
11	17	AM Inverse		AM Filter Selection						
12	18	DAGC Control Mode		HW Limited	AGC Zero	AGC Freeze	AGC Time Constant Selection			
13	19	AM Gain Ovrd	AM Gain Override Value							
14	20						AM Out TC En	AM Out Impdnc	AFC	
15	21							AM Bias <9:8>		
16	22	AM Bias <7:0>								
17-43	23-49									

Figure 4-20 Current Downconverter Setup Message Construction 0x4100 – LS-27 Protocol

4.3.1.1.10 Current Downconverter Auxiliary Setup Command/Response Message – 0x4101 Message ID

The Current Downconverter Auxiliary Setup command provides the user software with the auxiliary control information of the receiver. This command reflects the present set of auxiliary setup information sent by the 0x1101 and/or 0x1001 commands. This is a second-generation firmware command. Many of these status fields do not apply to the LS-27-B hardware platform. The message structure is shown in Figure 4-20. Content definitions for the 0x4200 command are provided in Figure 4-11.

Down Converter Current Auxiliary Setup Command Content (Message ID = 0x4101)

Header Byte		D7	D6	D5	D4	D3	D2	D1	D0	Notes:
0		Device ID								0x27
1		Device Address								0x00
2		Command Op Code LSB								0x01
3		Command Op Code MSB								0x41
4		Bytes to Follow LSB								0x01
5		Bytes to Follow MSB								0x00
Body Byte		**D7**	**D6**	**D5**	**D4**	**D3**	**D2**	**D1**	**D0**	**Notes:**
0	6								DCx	

Down Converter Current Auxiliary Setup Command Response

Header Byte		D7	D6	D5	D4	D3	D2	D1	D0	Notes:
0		Device ID								0x27
1		Device Address								0x00
2		Command Op Code LSB								0x01
3		Command Op Code MSB								0x41
4		Bytes to Follow LSB								0x12
5		Bytes to Follow MSB								0x00
Body Byte		**D7**	**D6**	**D5**	**D4**	**D3**	**D2**	**D1**	**D0**	**Notes:**
0	6	Host Averaging							DCx	
1	7	AGC Out dBm Range Lower Value								
2	8	AGC Out dBm Upper Value								
3	9	AGC Out Voltage Range Start Value								
4	10	AGC Out Voltage Range End Value								
5	11				IF Output Gain					
6	12				Video Gain Adjustment <13:8>					
7	13	Video Gain Adjustment <7:0>								
8-17	14-23									

Figure 4-21 Current Downconverter Auxiliary Setup Message Construction 0x4101 – LS-27 Protocol

5 Application Software Information

Lumistar provides a user application that is capable of control and status for the LS-27-M regardless of its physical configuration. The application is referred to as **LumistarDevice**. The application is somewhat generic and supports a number of Lumistar product platforms, including the LS-27-B and LS-27-M. The application can communicate over Serial (RS232 or RS422 4-Wire, and USB) or Ethernet interfaces.

5.1 Installation of the application and general setup

The **LumistarDevice** application does not require an installation package. It can be found in the LS-27-M "Software Files" folder of the support DVD supplied with the product shipment. It can also be found in the "Utilities" folder of the same support DVD.

The **LumistarDevice** application can run on virtually any Microsoft Windows platform. The application has been tested to work on the following Windows platforms: Win7 x86 and x64, Win10 x64 and Win11 x64.

It is suggested that a folder should be made on the target host, and the application should be copied into that location. The application needs to have administrative privileges to run and save a few configuration and operational parameters from run-to-run.

5.2 Connecting the software interface to the Receiver

Since the connection to the unit can include both serial and 100Mbps Ethernet network connections, the process of connection is different for each approach.

5.2.1 Serial RS232 or 4-Wire RS422 Interface

To connect via the raw serial interface, the proper serial interconnections must be made. Consult Section 3 for details on interconnecting a host computer to the receiver. Remember that a null-modem connection is required for bidirectional communication.

Once the physical connection has been made, launch the **LumistarDevice** application. The first window presented is a connection window as shown in Figure 5-1. To connect the software to the device, ensure that the serial BAUD rate is set to 57.6K BAUD followed by selecting the correct COM connection port. To connect the software, depress the **Query Device** button. Once connected the primary control status window will appear. Refer to section 5.3 for additional details.

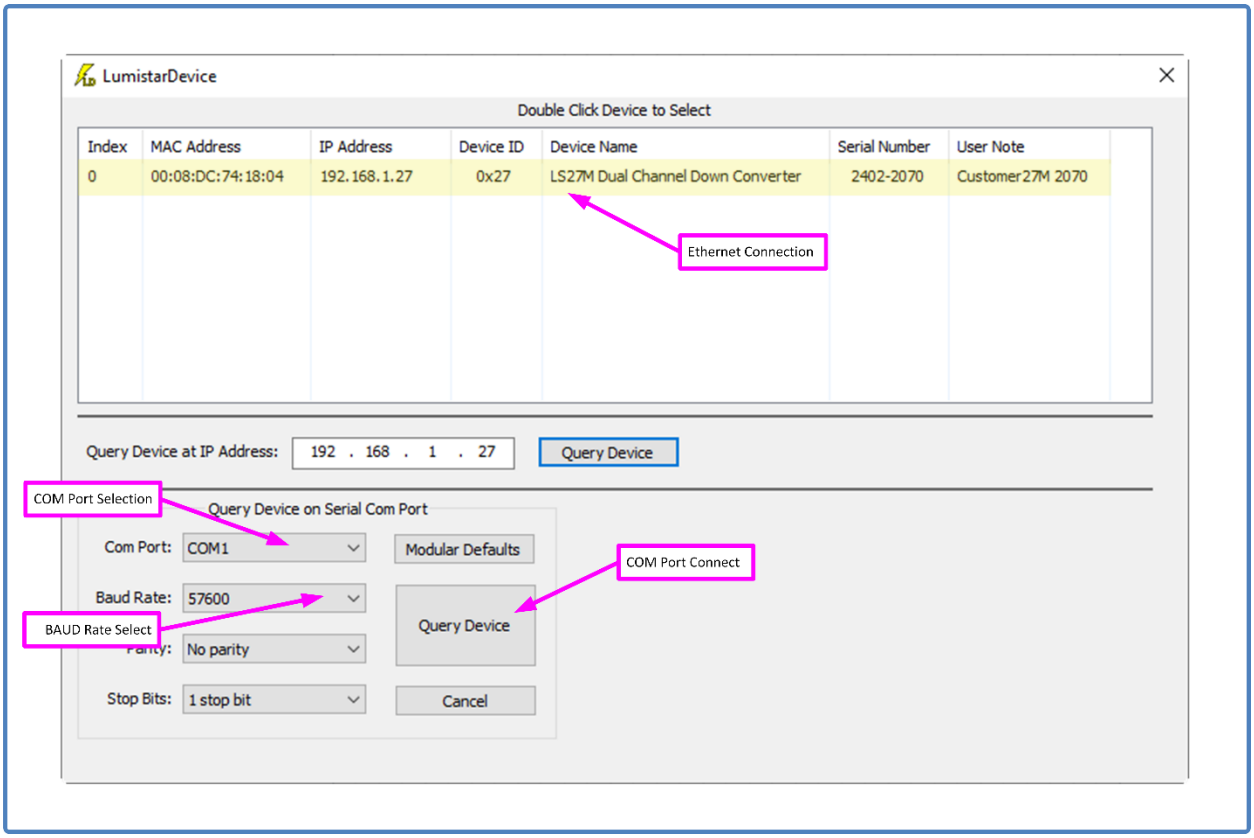

Figure 5-1 Serial COM Port Connection Window

5.2.2 USB 2.0 Interface

To utilize the USB interface to the LS-27 platform, the use of a USB-to-COM port driver is required. This driver is supplied in the "Utilities" folder of the support DVD in the "Prolific USB Driver Installation". Run the *PL23XX-M_LogoDriver_Setup_v400_20211229.exe* on the target Windows host machine to install the USB COM driver.

Once installed, to determine which COM port has been assigned to the USB interface, the user must open the Windows Device Manager and expand the Ports tab to find the Prolific driver assignment number. Figure 5-2 provides an example of an expanded Windows Device Manager Ports tab where the Prolific Tab highlighted. This number will be required once the application is launched and must be selected in the **Com Port** list of the control window for proper connection. Refer to Figure 5-1 for more details. Ensure that the BAUD rate is set to 57.6K BAUD and depress the **Query Device** button to establish the connection. Once connected the primary control status window will appear. Refer to section 5.3 for additional details.

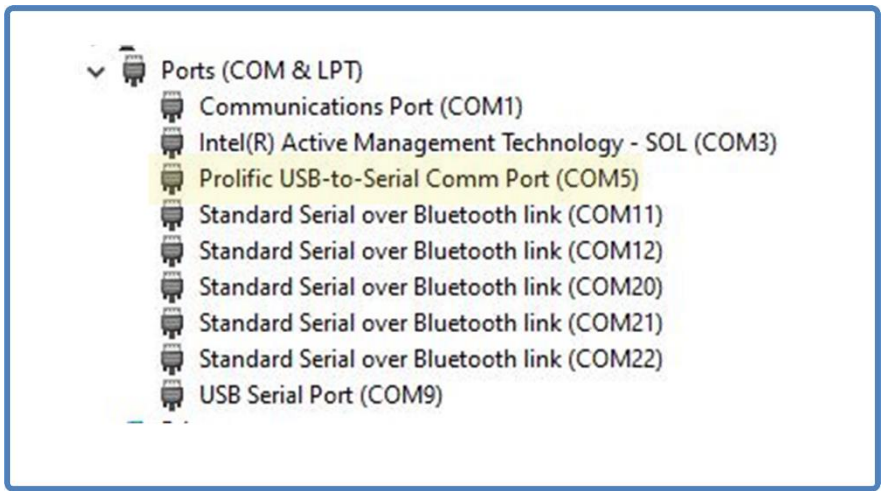

Figure 5-2 Device Manager Ports – Expanded (Example)

5.2.3 100Mbps Ethernet Interface

The LS-27-M devices will be delivered with a default static IP address of **192.168.1.27** and a subnet mask set to **255.255.255.0**. If the user network does not allow for this address, launch the **IP_AddressChanger** application. This utility is included in the LS-27 software installation and the utilities directory of the support DVD.

To change the IP address, at least a temporary IP connection to the default address subnet will be required. This requires that the host network adapter be set to the 192.168.1.xxx address to change the receiver IP address. Consult your local IT group on how to perform this operation.

Once the unit is connected to a network with this configuration, launch the **IP_AddressChanger** application. Launching the application will result in a window similar to the one illustrated in Figure 5-3.

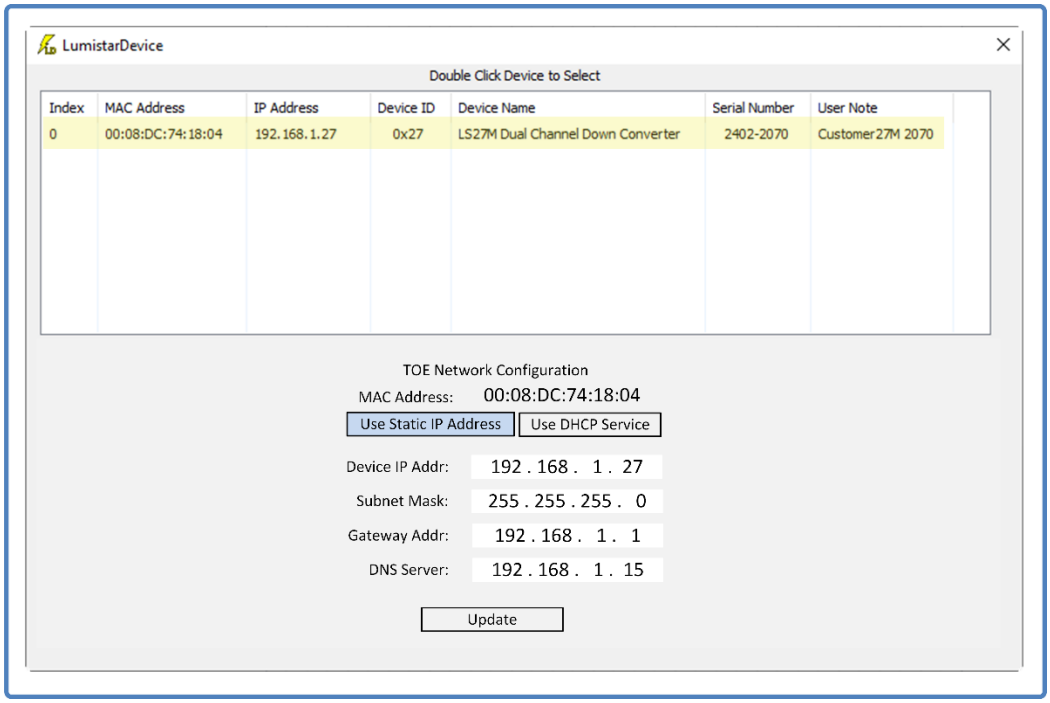

Figure 5-3 IP Address Changer Application

Once **IP_AddressChanger** is active, the user can change the address by entering the desired IP address, subnet mask, Gateway and DNS addresses desired, as well as whether the IP address is static or if DHCP services will be used, then select the **Update** button. The user will need to cycle power to make the new settings active. If the host target network adapter was temporarily changed to perform this operation, the original adapter settings can now be reestablished.

To launch the application using the network interface, simply select the interface from the original launch window. Refer to the highlighted Ethernet connection of Figure 5-1.

5.3 LumistarDevice Application Operations

This section provides **LumistarDevice** application operations information.

5.3.1 LS-27-M Setup Tab

The LS-27-M Setup is the main operational tab of the **LumistarDevice** application. Once the connection window closes, the user will be presented with an operational window similar to Figure 5-4.

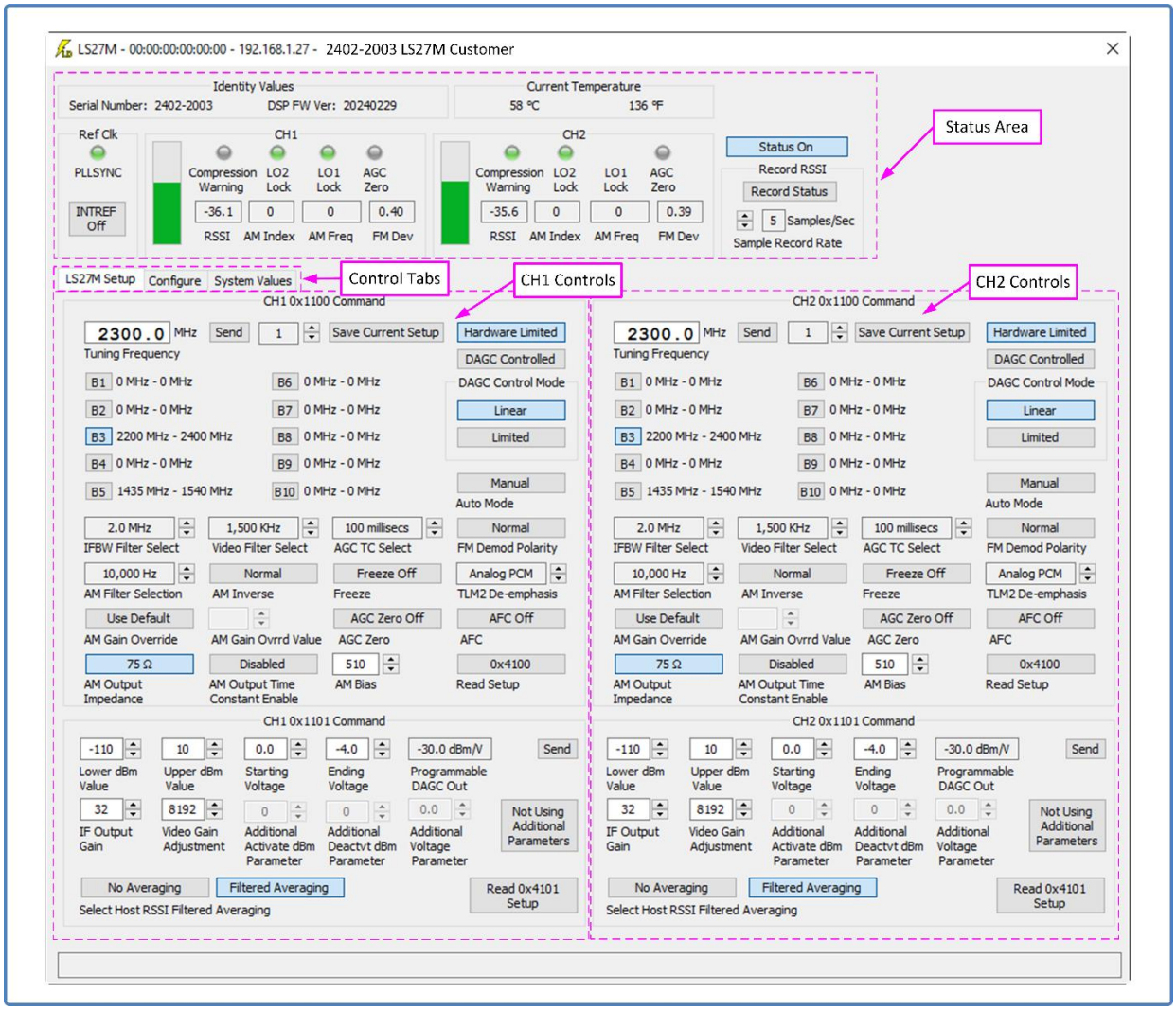

Figure 5-4 LumistarDevice – LS-27-M Setup Tab

5.3.1.1 LS-27-M Setup Tab – Status Area

The LumistarDevice application Setup Tab contains an area at the top of the display window that provides the user with receiver status. Each of the statuses are discussed further in the paragraphs within this section.

Identity Value – Serial Number: The receiver's serial number is listed in the upper left corner of the application status display.

Identity Value – DSP FW Version: The DSP firmware controls nearly all operational capabilities and mechanization. Since this is the main driver of the receiver's operational personality, a small window is provided to list the present DSP firmware version. This information may be required by customer support when answering service questions.

Current Temperature: This status area contains the present internal operational temperature in both Fahrenheit and Celsius figures. This value is updated at an approximate 2 second rate.

Ref Clock Status: An LED is provided to indicate the lock state of the internal reference for the LO synthesizers. This status is not the status of the INTREF itself but the high frequency reference of the LOs used for the downconversion process. This LED should be green, indicating proper operation.

INTREF On/Off: This button acts to toggle the Internal reference TCXO source on and off. In default operational scenarios, the INTREF should remain enabled. Do not switch this control to the OFF position.

Channel RSSI Level: There are two RSSI level indications: one bar gauge and a textual RSSI window. RSSI levels between +10 and -100dBm are expressed in these two windows.

Channel Compression Warning: This LED indicates when compression protection is active at the RF input of the given channel. This warning will be yellow if this state is active. Compression protection helps to protect the low noise amplifiers at the front end of the receiver in the event that high power signals are present at the input connector. The system acts to protect the unit from AM compression and provides overdrive capacity to nearly 1W at the input. This indicator will be clear if inactive.

The indication that compression protection is active indicates that RSSI measurement accuracies may not be as accurate as when the system is not active.

Channel LO Lock: The downconversion process within the receiver is typically provided via the use of two local oscillators (LOs). The lock state of these two LOs is presented using two LEDs per channel. If the LOs are unlocked, the LED will be yellow. During normal operation, the LEDs will be green.

Channel AGC Zero: If the AGC zero is active, a status LED will indicate this for each channel.

Status On/Off: The status On/Off button toggles the Status area update process for all status indicators. Some early versions of the **LumistarDevice** application had this button disabled at application launch. If the application is not updating, toggle the state of this button.

Record Status: There is a means of recording RSSI status at user prescribed rates as a CSV file. To enable this functionality the user should select the number of samples per second to record followed by the **Record Status** button. Halting this functionality will act to store the resulting CSV file in the same directory as the **LumistarDevice** application. The resulting file will include time stamp information (obtained from the host computer) as well as the RSSI values from both channels. Files will be stored by device Serial number.

5.3.1.2 LS-27-M Setup Tab – Channel 1 and 2 Controls

The LumistarDevice application Setup Tab contains a left- and right-hand channel control panels. Controls within these two areas are identical between channels. Controls within these control panels are discussed further in the paragraphs within this section.

0x1100 Send Button: The control panels for each receiver channel are based on two command messages sent to the receiver to control various aspects of the setup. This button forces the main setup command to be sent to the receiver. All areas in this area are related to this button. Most receiver commands within the panel cause an automatic update of this command but the button MUST be selected prior to saving internal setups within the receiver.

Save Current Setup Button/Select Up/Down Control: This button forces the current setups for the channel to be retained in the storage area indicated by the store up/down button. Internal storage and recovery capabilities were released in DSP firmware version 20240304 and later. DSP firmware dated prior to this date do not provide this capability.

Tune Frequency: The tune frequency for the receiver channel can be entered in this window. The minimal tune step for the LS-27-M is 1kHz and the minimal tuning step for the LS-27-B is 50kHz.

RF Bands Installed Status: This area of the receiver control panel contains status on the RF band filters installed in the receiver channel. Tuning outside the ranges presented is prohibited by the receiver firmware. Attempts to tune outside the ranges listed will be ignored and the receiver will remain at the last tuned frequency.

IF Filter Select: The receiver contains eight second IF bandpass filters. Thus, selection controls for the bandwidth of these filters are provided for user selection.

Video Filter Select: If the receiver contains the optional FM demodulator, then low-pass video filters are required for post detection processing, whether the signal demodulated is an analog or analog PCM data. The LS-27-B provides eight video post-detect filters and the LS-27-M design provides fifteen video low-pass filters. User selection of these video filters should be based on the format of the demodulated signal itself.

If the FM demodulator is not installed, video filter selection is not available.

AGC Time Constant Select: The AGC output is controlled via user selected time-constants. Time constant application to the AGC signal acts to filter the response characteristics prior to the signal being applied to tracking antenna applications. Eight different AGC time constants are available for user selection.

AM Filter Selection: In addition to time constant selections for AGC signals being applied in antenna tracking applications, AM filtering offers noise filtering to tracking AM signals. The LS-27 design provide thirty-two AM low-pass filter selections that can be applied to the output of the AM signal processing.

AM Inverse Select: Certain antenna tracking applications require inverted AM signal processing. This selection allows the user to invert the AM output polarity.

AGC Freeze Select: AGC Freeze is only functional in the DAGC mode. Freeze mode stops AGC gain control and forces the AGC into a linear operational mode.

AGC Zero Off/On: AGC Zero offsets the AGC signal to a zero state when enabled. This is helpful in some tracking applications. DAGC mode is required for this operational state.

AM Gain Override: AM output gain is factory calibrated to be 4Vp-p into a 75 ohm load with a 50% AM Index input signal. If the customer desires to set the AM output to a different gain setting, the default calibrated AM gain value can be overridden. This mode must be enabled prior to selecting the AM value desired using the AM Gain Override value controls.

AM Gain Override Value: AM Gain control override values can be set between 0 and 756. This control provides nearly linear gain control of the AM output gain. A 0 setting represents the lowest possible output. AM output clipping can occur based on the AM index of the source RF signal.

AM gain controls are available for the LS-27-B but are selectable only from 0 to 99.

AM Output Impedance Select: This control allows the user to select the output impedance of the AM output. Options of 50 ohms and 75 ohms are available.

This option is only available in the LS-27-M configuration.

AM HW AGC Time Constant Enable: This option applies a hardware integrator in the output of the AM signal. This integrator has an approximate 1msec time constant. This integration value is not adjustable.

This option is only available in the LS-27-M configuration.

AM Bias: The AM output can have a +/- 2.5VDC bias applied to offset the signal from is standard bipolar operation. Values between 0 and 1023 control this bias. A value of 510 to 511 represents no offset bias. Larger values apply a positive offset. Values lower than 510 apply a negative offset.

This option is only available in the LS-27-M configuration.

Hardware Limited/DAGC Controlled Selection: This control affects AGC processing applied to the IF gain. Hardware limited mode results in a fixed IF output signal that contains no AM modulation. DAGC mode allows for functions such as AGC freeze and zero as well as IF linear output modes. DAGC limited mode is not functional in the present firmware release.

DAGC Control Mode - Linear: This mode results in the 70MHz IF output having a linear output response versus the input. Approximately 45dB of gain is applied to the input signal level so the IF output level will vary between approximately -65dBm and +15dBm which represents an 80dB dynamic range.

DAGC Control Mode - Limited: This mode is non-functional in DSP firmware at this time.

FM Video Filter Auto Mode Select: When the FM demodulation option is present and analog PCM is present, the Auto mode will make selections of FM post detect low-pass filters based on the user selection of the IF filter.

It should be noted that this should only be applied to analog PCM mode and not pure analog FM demodulation.

It should also be noted that there are more post-detect video filter selections available than there are IF filter selections. This means that the proper video filter selection for a specific data rate may not be auto selected correctly. Since the receiver does not the actual data rate of the analog PCM data, its selection is based on the closest video filter that is half the bandwidth of the IF filter selected by the user.

FM Demod Polarity Select: FM demodulator output polarity can be inverted based on this control setting. This setting may be useful for signals that are spectral inverted when transmitted.

TLM2 De-emphasis Select: This control only applies to receivers that contain FM demodulation. There are four control modes. Each mode has specific and distinct use.

Bypass mode is the appropriate mode for purely analog FM demodulation that is either tone based or analog video that contains no pre-emphasis. This mode contains no video gain control. Gain control in this mode is manual and controlled via the video gain adjust.

NTSC mode applies a NTSC de-emphasis filter in-line with the video output path. This mode should only be selected if the demodulated signal contains an NTSC video signal with pre-emphasis applied. Do not use this mode with PAL, analog PCM, or pure analog FM modulated signals that do not contain NTSC pre-emphasis.

PAL mode is similar to the NTSC mode. This mode places a PAL de-emphasis filter in-line with the video output path. This mode has been specifically designed for cases where the demodulated signal contains a PAL video signal with pre-emphasis. Do not use this mode with NTSC, analog PCM, or pure analog FM modulated signals that do not contain PAL pre-emphasis.

Analog PCM mode is specifically for analog modulated PCM data. This mode applies an AGC control to drive the demodulated video output to a specific output voltage and keep it at this level. Do not use this mode with modulated signals that are a pure analog video formats.

AFC On/Off Select: Automatic Frequency Control is processing applied to the IF output. This functionality is a future addition to the LS-27-M.

Read Setup 0x4100: This button retrieves the current settings of the upper controls panel.

0x1101 Send Button: The lower channel control panel contains auxiliary controls for the receiver. This includes settings for the programmable AGC output, IF and Video gain adjustments and Video filtering. Changing settings in this panel can be sent to the receiver via this button.

Most control entries are automatically sent to the receiver. This button should be selected prior to saving internal setups.

DAGC Lower dBm Value Set: This control is one of four programmable AGC settings. This setting is coupled with the DAGC Starting Voltage setting. AGC dBm outputs are programmable between +10 to -110dBm and any values in between. This control represents the lower, or minimum, dBm set point that the AGC should respond to. AGC signals below the lower limit setting will not result in AGC signal voltage changes. Values can be set in 1dBm increments.

DAGC Upper dBm Value Set: This control is one of four programmable AGC settings. This setting is coupled with the DAGC Ending Voltage setting. AGC dBm outputs are programmable between +10 to -110dBm and any values in between. This control represents the upper, or maximum signal dBm set point that the AGC should respond to. AGC signals above the upper limit setting will not result in AGC signal voltage changes. Values can be set in 1dBm increments.

DAGC Starting Voltage Set: This control is one of four programmable AGC settings. This setting is coupled with the DAGC Lower dBm setting. AGC voltage outputs are programmable between +/- 5.0 in 0.1V increments. This control represents the voltage of the AGC output when the channel input signal level reaches the lower dBm set point.

It is important to note that the slope of the voltage outputs can maintain a positive or negative slope control.

DAGC Ending Voltage Set: This control is one of four programmable AGC settings. This setting is coupled with the DAGC Upper dBm setting. AGC voltage outputs are programmable between +/- 5.0 in 0.1V increments. This control represents the voltage of the AGC output when the channel input signal level reaches the upper dBm set point.

It is important to note that the slope of the voltage outputs can maintain a positive or negative slope control.

IF Output Gain Adjust: To adjust the level of the IF output signal, this control allows the user with an approximate 31.5dBm gain control. Values between 0 and 63 can be applied to this control. Values of 0 will result in the lowest output level. Conversely, 63 will result in the largest IF output level. The unit defaults to a center value of 32. Each step represents an approximate 0.5dBm level control.

This option is only available in the LS-27-M configuration.

Video Gain Adjust: This gain adjustment control is only functional if the FM demodulator is present. This control allows for Video output adjustment using values between 0 and 16383. The default value of this control is 8196. Values smaller than the default will result in lower peak-to-peak video output levels. Values larger will increase the peak-to-peak video output level.

No Averaging/Filtered Averaging: When using the RSSI host output in antenna control applications, it is often advantageous to provide a stable host value when approaching the noise floor of the receiver. To accomplish this, a 1st order software filter is applied to the RSSI values being sent to the host if this filtering has been enabled.

Read 0x4101 Button: This button allows the software to update the auxiliary settings in the user GUI to the present settings.

5.3.2 Configure Tab

The configure tab provides lower-level device configuration controls. Included in these controls are RS232/RS422 serial mode selections, Boot mode control settings, Network user note controls, and an alternate means to the use of the **IP_AddressChanger** to make changes to the Network configuration settings. Paragraphs within this section describe the controls of this tab. Figure 5-5 illustrates a typical Configure Tab.

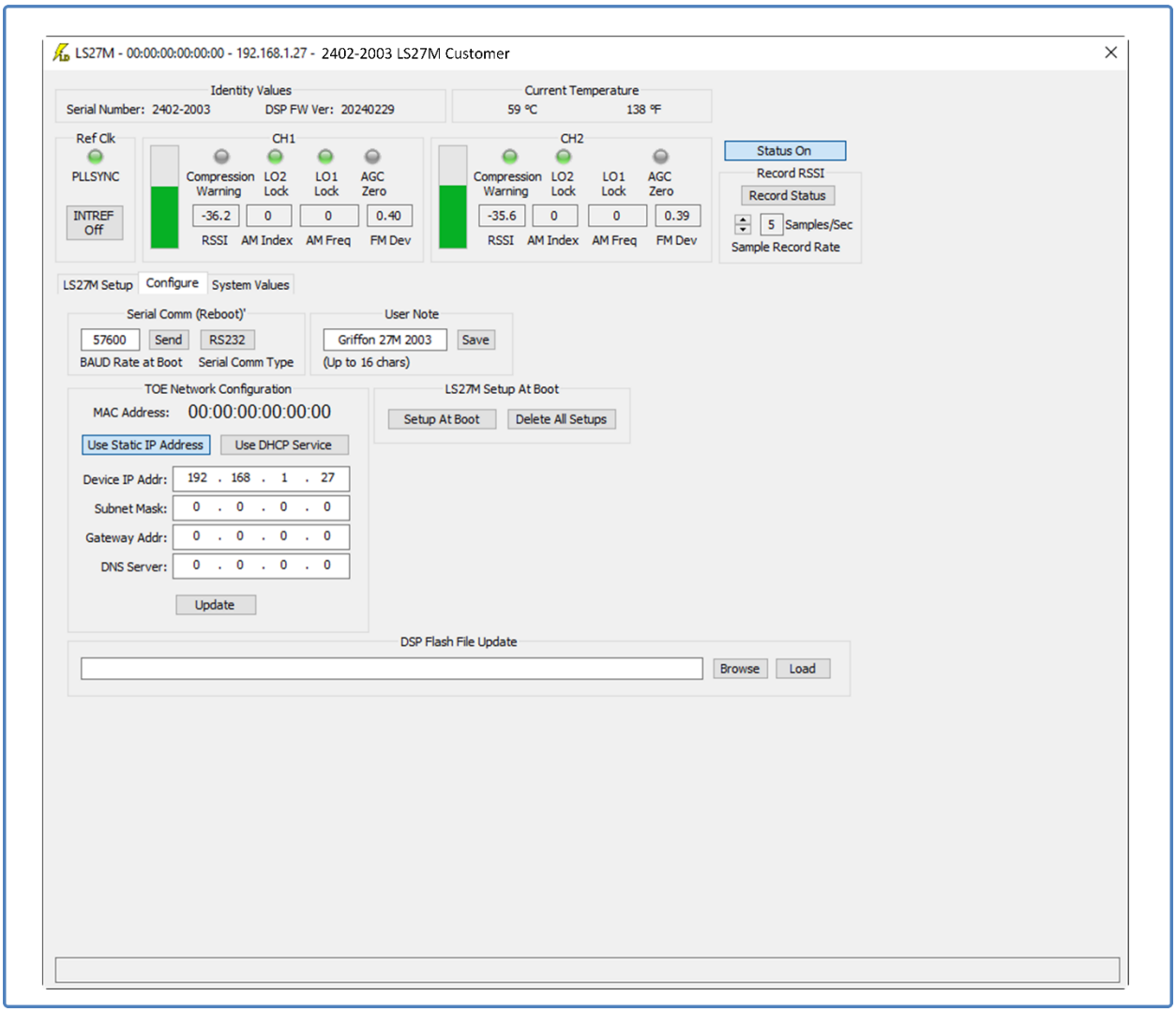

Figure 5-5 LumistarDevice – Configure Tab

Serial Comm Controls: The LS-27 design allows for two low-speed serial interface transceivers. Either the low-speed serial interface transceiver can operate at RS232 levels, or the interface can be a 4-wire RS422 differential interface. This control sets the user selection for this transceiver. Once set, the unit has to be power cycled to make the choice active.

User Note Entry Window: To simplify unit network identification, especially where multiple LS-27-Ms are present on a network, a 16-character network name tag can be stored in non-volatile memory inside the LS-27-M. This identification tag will be displayed for all LS-27-M devices that can be identified on a given network when launching the **LumistarDevice** application.

TOE Network Configuration: Similar to the controls of the **IP_AddressChanger** the user can change the device network configuration by entering the desired IP address, subnet mask, Gateway and DNS addresses desired, as well as whether the IP address is static or if DHCP services will be used. Once set, select the **Update** button. The user will need to cycle power to make the new settings active.

LS-27-M Setup at Boot Controls: Two boot setup controls are available on this tab. One control sets all previously internally stored setups back to default values, effectively erasing the content. The other boot setup control allows that last setup stored to be recovered at boot time.

It should be noted that simply storing the setups internally via the LS-27-M Setup tab will not make the settings recover at power up. Selecting this button will make that action active at boot time.

DSP firmware version 20240304 or later is required for these controls to be functional.

DSP Flash File Update Control: Updates to DSP firmware can be made by pointing to an update file provided by Lumistar Support, as required.

At the time of this document writing, the DSP firmware update functionality is not operational.

5.3.3 System Values Tab

The systems value tab of the **LumistarDevice** application provides the user with general operational health and environmental status of the receiver, as well as customer information and unit identification. Voltage and temperature updates are not continuously updated by default but can be continuously updated by selecting the **Continuous 0x2002 Status** button. Figure 5-6 illustrates the Systems Value tab.

Green LEDs within the status windows indicate that the voltage levels and operational environment variables are within nominal ranges.

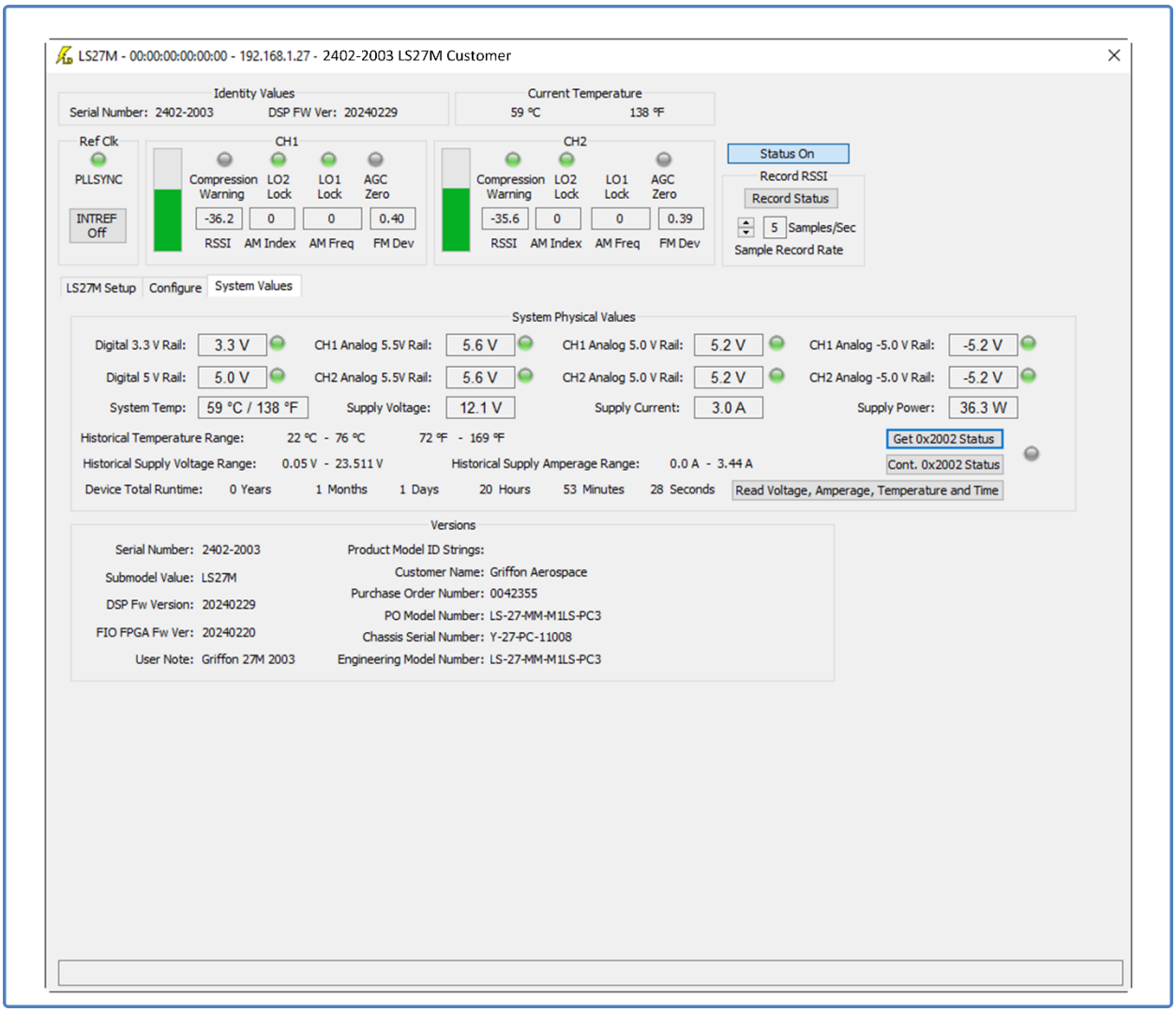

Figure 5-6 LumistarDevice – System Values Tab